沁恒微电子

Condensing Wisdom , Changing Life

PRODUCT

2024Q1
Preparation

Product Selection Manual

Communication Interface ICs and MCU ICs Company

Add:No.18 Ning Shuang Road, Nanjing - Qingheng Technology Park
Technical Support: tech@wch.cn
Business Inquiry: sales@wch.cn
P.C.:210012
https://wch-ic.com

INTRODUCTION

About us

Nanjing Qinheng Microelectronics Co., Ltd. focuses on connectivity technology and microprocessor research and is an IC design company that designs chips based on self-developed professional interface IP and microprocessor IP. We provide USB/ Bluetooth /Ethernet interface chips alongside connectivity/interconnectivity/wireless MCUs integrated with these interfaces.

Our company has been focusing on the research of foundational technology. Firstly, we researched and implemented key and common IP components, such as microprocessors and professional interface IPs. Secondly, we designed chips based on these IP components. Then, they can be complemented with protocol stack software and computer-side drivers to form professional products or solutions. The combination of microprocessor and professional interface technologies like USB resulted in a wide range of product categories.

Self-developed IP systems enhance the flexibility of the chip architecture and save the cost of outsourcing IP components. We conduct in-depth research on underlying IP components, optimizing their integration, improving overall performance, reducing power consumption, and enhancing efficiency. This creates long-term marginal cost advantages and sustainable competitiveness from both component-level and core-level perspectives.

Main brand: WinChipHead (WCH)
Product positioning: Professional, Easy to use
Application areas: Computer peripherals, mobile phone peripherals, industrial control, IoT, etc

Our advantage: Self-developed IP

Based on our specialization in connectivity and networking, we conducted dedicated research on key and common technologies of interface chips and MCUs that are especially suited for this era of interconnectivity and networking everywhere. These include microprocessor cores, professional interfaces such as USB/Bluetooth/Ethernet, and other IP modules. This combination is called "one core and three interfaces," in short.

Self-developed interface IP: highly optimized system-level interface chips provide efficient connectivity solutions for a connected world

Our company's self-developed IP systems open up the vertical data chain consisting of transceivers, controllers, and protocol stacks, improving the synergy between hardware and software in products, enhancing efficiency, and improving compatibility. The combination of professional interfaces and multi-level cores forms a vertically structured product architecture, including PHY, controller, protocol stack, and interface conversion chips. These highly optimized interface chips enable the expansion or bridge conversion of USB, Bluetooth, and Ethernet modules while shielding the underlying technical details. With a multi-level product structure and professional performance, we facilitate the development of customer products.

Self-developed core IP: a flexible combination of multi-level cores and professional peripherals to form a wide range of MCUs and system-level chips

Our company's self-developed cores have three levels: QingKe RISC-V, E8051, and RISC8. Various generations of these cores focused on application optimization, core freedom realization, and deployment in many products. We stand at the forefront of the RISC-V industry and are committed to promoting the landing and development of RISC-V in the MCU industry, and have published the key technologies of the QingKe RISC-V series of mass-production chips at the first RISC-V World Conference China.
QingKe core is based on the concept of RISC-V eco-compatibility and optimized expansion. We incorporate technologies like VTF to accelerate interrupts, expand the protocol stack, Support low-power application instructions, and streamline debug interfaces. The general-purpose and high-speed interface MCUs equipped with QingKe cores reduce dependence on third-party chip technology and software platforms. This eliminates the need for licensing fees and royalties for external cores, which saves customers money. Our company's flexible combination of multi-level cores and professional peripherals, such as high-speed USB, USB PD, Ethernet, and Bluetooth Low Energy, with a focus on adaptability and sustainability. This enables MCU chips to demonstrate excellent connectivity, performance, power consumption, and integration capabilities. We offer a wide range of categories and application-specific and future-proof scalability.

Combining hardware and software to break through the barriers of device connectivity, promoting seamless communication and cross-platform mobility

In addition to the chip design team, hardware, and embedded software teams specialized in lower-level development, our company also has a system and software team specializing in upper-level deployments like computers, servers, and the Core Cloud platform. The team specializes in developing underlying core drivers, communication libraries, and APP application tools for various operating systems and platforms such as Windows, Linux, macOS, Android, iOS, and WeChat. We utilize virtualization technology to enable seamless cross-platform connectivity and application migration, facilitating the transformation of offline devices into connected devices and enhancing the added value of end products. Furthermore, we provide customers with comprehensive system-level solutions.

After years of dedicated efforts, our company has provided more than 100 chip categories and technical solutions to customers. Qinheng's chips play a significant role worldwide by delivering products to tens of thousands of companies worldwide, with over a billion devices establishing connections through WCH chips annually. Our company's USB series chips have shipped over a billion units, and the number of target programs downloaded for customers through the self-programming platform reaches millions per month.

Qinheng greatly emphasizes investment in research and development, acquiring multiple independent intellectual property rights through innovation, including patents, integrated circuit layout design rights, software copyrights, and more. Our company has been recognized as a high-tech enterprise, a national-level specialized enterprise, and a new "small giant" enterprise. We have also registered international trademarks in many countries and regions, such as the United States, United Kingdom, Germany, Japan, and South Korea.

We never forget the essence and social significance of our enterprise. As we grow, we strive for mutual growth with our staff. We also adhere to a healthy market-oriented operation and use high-quality, professional chips to assist our customers in providing society with better products.

Our Vision: Condense wisdom and change lives
Our Mission: Concentrate on the core, industry specialization, and transform technological innovation into customer value

CONTENTS

Microcontroller Series

CH32V006	QingKe RISC-V core Wide-voltage value MCU	1-2
CH32X035	QingKe RISC-V Core USB communication and PD power dual function Type-C MCU	3-4
CH32V103 /F103	QingKe RISC-V/Cortex-M3 core 3.3V/5V rated voltage general MCU	5-6
CH32L103	QingKe RISC-V core PDUSB low-power general MCU	7-8
CH32V303/203 /F203	QingKe RISC-V/Cortex-M3 core High-density general MCU	9-10
CH32V307/5 /F207/5	QingKe RISC-V/Cortex-M3 core High-speed interconnect MCU	11-12
CH32V208 /F208	QingKe RISC-V/Cortex-M3 core BLE wireless MCU	13-14
CH32M系列	QingKe RISC-V/Cortex-M3 core Built-in pre-driven motor control MCU	15
CH564/3	QingKe RISC-V Core 480Mbps high-speed USB and 100Gb Ethernet MCU	16
CH554/2/1	E8051 core USB and Touchkey MCU	17
CH549/8/7/6	E8051 core Enhanced multi-interface USB MCU	18

USB Featured Applications

CH643	QingKe RISC-V core Support full internal drive RGB full-color keyboard MCU with Type-C	19
CH569/5	QingKe RISC-V core USB3.0 SuperSpeed and SerDes interface MCUs	20
CH568/7	32-bit RISC core Dual high-speed USB transmission and encrypted interface MCUs	21
CH645	QingKe RISC-V core USB multi-host/device + Dual PD + Ethernet multi-interface MCUs	22
CH528/4	8-bit RISC core USB PD high voltage power management MCUs	23

Bluetooth Low Energy Series

CH583/2/1	QingKe RISC-V core BLE5.3 wireless MCU	24
CH592/1	QingKe RISC-V core BLE5.4 wireless MCU with integrated LCD driver	25
CH9140/1/2/3	BLE to single/dual serial, tee ICs	26
Bluetooth modules and finished products, gateways, and mesh solutions		27-29

Ethernet Series

CH182	10/100M Ethernet PHY transceiver	30
CH390	10/100M Ethernet controller ICs	31
CH395/2	TCP/IP network stack ICs	32
CH9121/0	Network serial port transparent transmission ICs	33
CH397	USB2.0 100Mbps NIC ICs	35
Serial to network module	Bi-directional transparent transmission of serial and network data	34

USB Series

CH397	USB2.0 100Mbps NIC ICs	35
CH334/5	4-port crystal-free USB HUB controller ICs	36
CH338	7-Port industrial-grade USB HUB controller ICs	37
CH339	7-port integrated Ethernet, card reader, USB PD, multi-function high-speed HUB ICs	38
CH323	4-port USB3.2 Gen1 SuperSpeed HUB controller ICs	39
CH347	USB2.0 high-speed USB to JTAG/SPI/I2C/UART/GPIO ICs	40
CH348/7/4/3/2/1/0	USB to serial port ICs	41-42
CH341/5	USB to I²C/SPI/MIDI/print port/parallel port ICs	43
CH9329/8	Serial port to HID ICs	44
CH317	USB2.0 extender controller ICs	45
CH318	USB2.0 isolated extender control ICs	46
CH378	USB2.0 High-Speed File Management Control ICs	47-48
CH132	USB2.0 High-Speed transceiver	48

USB PD Protocol / Type-C Fast Charging Series

CH641/CH246	Specialized MCU for PD and wireless charging	49
CH230/1/3/5/6/7/8	USB PD and other multi-fast charging protocol chips	50
CH223/4/1	USB PD and other multi-fast charging protocols powered ICs	51
CH252/3/4/1	eMarker electronic label ICs	52
CH32X035/L103	General MCU with USB PD function	3-4/7-8

PCI/PCIe Series

CH368	PCIe bus interface ICs	53
CH384/2	PCIe bus quad/dual serial & print port ICs	54

Display Driver and Keyboard Scanning Series

CH463/2	LCD driver ICs	55
CH457	128 LED display driver	57
Display and keyboard scanning control options		58

Microcontroller Peripheral Series

CH438	8 serial expansion ICs	59
CH481/4/2/3/6/CH9445	USB3.0 SuperSpeed analog switch ICs	60
CH448/4/0/5/2/3	Low resistance high bandwidth analog switch ICs	61
CH449/6	Dual 4×4 low resistance analog switch array ICs	62

Product Solutions

Low-power wireless / Network communications / USB applications	63-64
Data acquisition / Data storage & security / Protocol power / Interface conversion	65-66

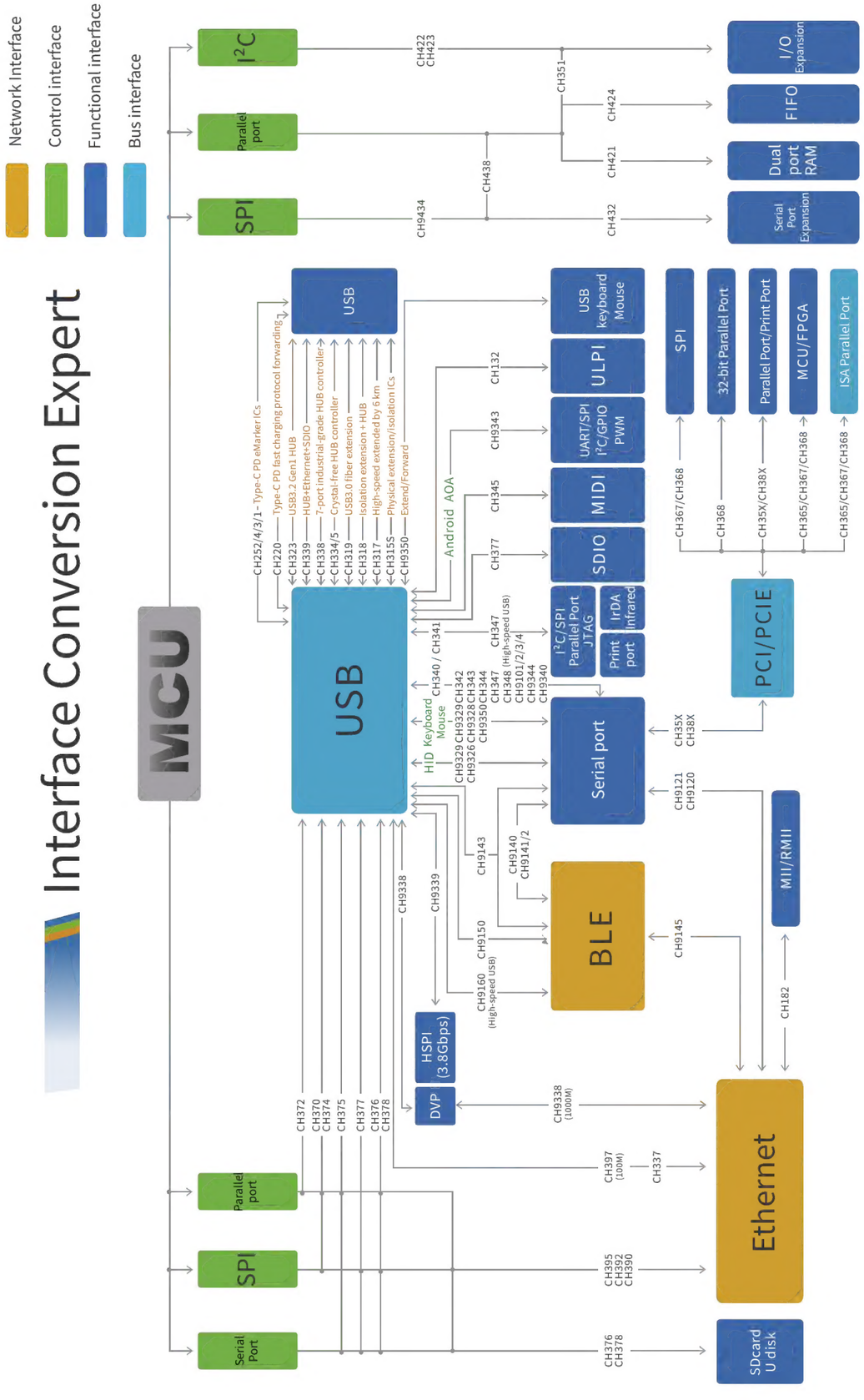

WCH MCU Selection Guide

Selection Guide of MCU

	CH32V003	CH32X035	CH32L103	CH32V103	CH32V203	CH32V208	CH32V305	CH32V307	CH32V317
Bluetooth						BLE 5.3			
Ethernet						10M MAC 10M PHY		1000M MAC 10M PHY	1000M MAC 100M PHY
USB		USB2.0 FS USB PD	USB2.0 FS USB PD	USB2.0 FS	USB2.0 FS Dual USB	USB2.0 FS Dual USB	480Mbps Dual USB Built-inPHY	480Mbps Dual USB Built-inPHY	480Mbps Dual USB Built-inPHY
Others	ADC/OPA TIMx/SPI USART/I²C	ADC/TIMx SPI/OPA CMP/PIOC I²C/USART	ADC/TIMx LPTIM/CAN OPA/CMP/SPI I²C/USART	ADC TIMx/SPI USART/I²C	144MHz ADC/CAN/OPA/I²C TIMx/SPI/USART		144MHz U(S)ART*8/CAN*2/Timer*10 ADC*2/DAC*2/OPA*4 SDIO/DVP/FSMC/TRNG		
Core	QingKeV2A	QingKeV4C		QingKeV3A	QingKeV4B	QingKeV4C	QingKeV4F(FPU)		
	WCH RISC-V general series								

	CH573/1	CH583/2/1	CH592/1	CH569/5	CH641	CH643	CH645
Bluetooth	BLE 4.2	BLE 5.3	BLE 5.4				
Ethernet				1000M MAC			100M MAC 10/100M PHY
USB	USB2.0 FS	USB2.0 FS Dual USB	USB2.0 FS	5Gbps USB3.0 OTG	USB PD	USB2.0 FS USB PD	USB2.0 HS 8 USB Dual USB PD
Others	RTC/ADC TIMx/SPI/PWM UART	RTC/ADC TIMx/SPI/PWM UART/I²C	RTC/LCD ADC/TIMx SPI/PWM UART/I²C	DVP 3.8Gbps HSPI AES/SM4	QII/ISP/BC ADC/TIMx USART/I²C	LEDPWM ADC/TIMx OPA/CMP/SPI USART/I²C	TIMx/SDIO SPI/I²C USART
Core	QingKeV3A	QingKeV4A	QingKeV4C	QingKeV3A	QingKeV2A	QingKeV4C	
	WCH RISC-V wireless & dedicated series						

	CH52X CH53X	CH54X CH55X	CH561/3	CH567/8	CH579/8/7	CH32F103	CH32F203	CH32F205	CH32F207	CH32F208
Bluetooth					BLE 4.2					BLE 5.3
Ethernet			100M MAC 100M PHY		10M MAC 10M PHY				1000M MAC 10M PHY	10M MAC 10M PHY
USB	USB2.0 FS	USB2.0 FS Multi-USB	480Mbps	480Mbps Dual USB	USB2.0 FS	USB2.0 FS Dual USB	USB2.0 FS Dual USB	480Mbps Dual USB Built-in PHY	480Mbps Dual USB Built-in PHY	USB2.0 FS Dual USB
Others	1T Low cost	Type-C PD TouchKey ADC	ADC/UART SPI	SATA II SDIO AES/SM4	RTC/LCD TouchKey	CAN ADC/DAC SPI/USART	144MHz ADC/DAC/SDIO I²C/TRNG/OPA/I²S		UART * 8 CAN * 2 Timer * 10	CAN/ADC OPA/SPI UART*4
Core	RISC 8bit Low cost	E8051 Multi-USB	RISC 32bit High-speed interface		Cortex-M0 Low-power wireless	Cortex-M3 general series				

32-bit QingKe RISC-V General-purpose Series MCUs

Part NO.	Freq	Flash	SRAM	GPIO	Adv/GP Timer	PWM	WDOG	RTC	ADC Unit/CH	Touch key	DAC	OPA	SPI/I²S	I²C	UART	CAN	USB2.0 FS	USB2.0 HS	Ethernet	BLE	SDIO	TRNG	Other Features	VDD	Package
CH32V002J4M6	48MHz	16K	4K	6	1/1	6	2	-	1/6	-	-	-	-/-	1	1	-	-	-	-	-	-	-	-	3.3/5.0	SOP8
CH32V002D4U6	48MHz	16K	4K	11	1/1	8	2	-	1/4	-	-	-	-/-	1	1	-	-	-	-	-	-	-	-	3.3/5.0	QFN12
CH32V002A4M6	48MHz	16K	4K	14	1/1	8	2	-	1/6	-	-	-	1/-	1	1	-	-	-	-	-	-	-	-	3.3/5.0	SOP16
CH32V002F4U6	48MHz	16K	4K	18	1/1	8	2	-	1/8	-	-	-	1/-	1	1	-	-	-	-	-	-	-	-	3.3/5.0	QFN20
CH32V002F4P6	48MHz	16K	4K	18	1/1	8	2	-	1/8	-	-	-	1/-	1	1	-	-	-	-	-	-	-	-	3.3/5.0	TSSOP20
CH32V003J4M6	48MHz	16K	2K	6	1/1	6	2	-	1/6	-	-	1	-/-	1	1	-	-	-	-	-	-	-	-	3.3/5.0	SOP8
CH32V003A4M6	48MHz	16K	2K	14	1/1	8	2	-	1/6	-	-	1	-/-	1	1	-	-	-	-	-	-	-	-	3.3/5.0	SOP16
CH32V003F4U6	48MHz	16K	2K	18	1/1	8	2	-	1/8	-	-	1	1/-	1	1	-	-	-	-	-	-	-	-	3.3/5.0	QFN20
CH32V003F4P6	48MHz	16K	2K	18	1/1	8	2	-	1/8	-	-	1	1/-	1	2	-	-	-	-	-	-	-	-	3.3/5.0	TSSOP20
CH32V005E6R6	48MHz	32K	6K	22	1/1	8	2	-	1/8	-	-	1	1/-	1	2	-	-	-	-	-	-	-	-	2~5	QSOP24
CH32V005F6U6	48MHz	32K	6K	18	1/1	8	2	-	1/8	-	-	1	1/-	1	2	-	-	-	-	-	-	-	-	2~5	QFN20
CH32V005F6P6	48MHz	32K	6K	18	1/1	8	2	-	1/8	-	-	1	1/-	1	2	-	-	-	-	-	-	-	-	2~5	TSSOP20
CH32V005D6U6	48MHz	32K	6K	11	1/1	8	2	-	1/4	-	-	1	-/-	1	2	-	-	-	-	-	-	-	-	2~5	QFN12
CH32V006K8U6	48MHz	62K	8K	31	1/1	8	2	-	1/8	8	-	1	1/-	1	2	-	-	-	-	-	-	-	-	2~5	QFN32
CH32V006E8R6	48MHz	62K	8K	22	1/1	8	2	-	1/8	8	-	1	1/-	1	2	-	-	-	-	-	-	-	-	2~5	QSOP24
CH32V006F8U6	48MHz	62K	8K	18	1/1	8	2	-	1/8	8	-	1	1/-	1	2	-	-	-	-	-	-	-	-	2~5	QFN20
CH32V006F8P6	48MHz	62K	8K	18	1/1	8	2	-	1/8	8	-	1	1/-	1	2	-	-	-	-	-	-	-	-	2~5	TSSOP20
CH32X035R8T6	48MHz	62K	20K	60	2/1	10	2	-	1/14	14	-	2	1/-	1	4	-	H/D	-	-	-	-	-		3.3/5.0	LQFP64M
CH32X035C8T6	48MHz	62K	20K	46	2/1	10	2	-	1/10	10	-	2	1/-	1	4	-	H/D	-	-	-	-	-		3.3/5.0	LQFP48
CH32X035G8U6	48MHz	62K	20K	27	2/1	10	2	-	1/10	10	-	2	1/-	1	4	-	H/D	-	-	-	-	-	PIOC/CMP USB PD	3.3/5.0	QFN28
CH32X035G8R6	48MHz	62K	20K	26	2/1	10	2	-	1/11	11	-	2	1/-	1	4	-	H/D	-	-	-	-	-	PIOC/CMP USB PD	3.3/5.0	QSOP28
CH32X035F8U6	48MHz	62K	20K	19	2/1	8	2	-	1/10	10	-	2	1/-	1	3	-	D	-	-	-	-	-	PIOC/CMP USB PD	3.3/5.0	QFN20
CH32X035F7P6	48MHz	62K	20K	18	2/1	9	2	-	1/11	11	-	1	1/-	1	3	-	D	-	-	-	-	-	PIOC/CMP USB PD	3.3/5.0	TSSOP20
CH32X033F8P6	48MHz	62K	20K	18	2/1	7	2	-	1/10	10	-	2	1/-	1	4	-	D	-	-	-	-	-	PIOC/CMP USB PD	3.3/5.0	TSSOP20
CH32V103C6T6	80MHz	32K	10K	37	1/2	12	2	1	1/10	10	-	-	1/-	1	2	-	H/D	-	-	-	-	-	PIOC/CMP USB PD	3.3/5.0	LQFP48
CH32V103C8U6	80MHz	64K	20K	37	1/3	16	2	1	1/10	10	-	-	2/-	2	3	-	H/D	-	-	-	-	-	-	3.3/5.0	QFN48X7
CH32V103C8T6	80MHz	64K	20K	37	1/3	16	2	1	1/10	10	-	-	2/-	2	3	-	H/D	-	-	-	-	-	-	3.3/5.0	LQFP48
CH32V103R8T6	80MHz	64K	20K	51	1/3	16	2	1	1/16	16	-	-	2/-	2	3	-	H/D	-	-	-	-	-	-	3.3/5.0	LQFP64M
CH32L103F8P6	96MHz	64K	20K	16	1/3	11	2	1	1/9	9	-	1	1/-	1	4	1	D	-	-	-	-	-		3.3	TSSOP20
CH32L103F8U6	96MHz	64K	20K	19	1/3	14	2	1	1/10	10	-	1	2/-	2	4	1	H/D	-	-	-	-	-		3.3	QFN20
CH32L103G8R6	96MHz	64K	20K	26	1/3	15	2	1	1/10	10	-	1	2/-	2	4	1	H/D	-	-	-	-	-	LPTIM/CMP USB PD	3.3	QSOP28
CH32L103K8U6	96MHz	64K	20K	31	1/3	16	2	1	1/10	10	-	1	1/-	1	4	1	H/D	-	-	-	-	-	LPTIM/CMP USB PD	3.3	QFN32
CH32L103C8T6	96MHz	64K	20K	37	1/3	16	2	1	1/10	10	-	1	2/-	2	4	1	H/D	-	-	-	-	-	LPTIM/CMP USB PD	3.3	LQFP48
CH32V203F6P6	144MHz	32K	10K	16	1/3	8	2	1	2/9	9	-	1	1/-	-	1	1	D	-	-	-	-	-	LPTIM/CMP USB PD	2.5/3.3	TSSOP20
CH32V203G6U6	144MHz	32K	10K	24	1/3	10	2	1	2/10	10	-	2	1/-	1	2	1	D	-	-	-	-	-	LPTIM/CMP USB PD	2.5/3.3	QFN28
CH32V203K6T6	144MHz	32K	10K	26	1/3	15	2	1	2/10	10	-	2	1/-	1	2	1	D	-	-	-	-	-	-	2.5/3.3	LQFP32
CH32V203C6T6	144MHz	32K	10K	37	1/3	16	2	1	2/10	10	-	2	1/-	1	2	1	D+H/D	-	-	-	-	-	-	2.5/3.3	LQFP48
CH32V203F8P6	144MHz	64K	20K	17	1/3	12	2	1	2/9	9	-	2	1/-	1	2	-	H/D	-	-	-	-	-	-	2.5/3.3	TSSOP20
CH32V203F8U6	144MHz	64K	20K	19	1/3	12	2	1	2/9	9	-	2	1/-	-	2	-	D	-	-	-	-	-	-	2.5/3.3	QFN20
CH32V203G8R6	144MHz	64K	20K	24	1/3	15	2	1	2/10	10	-	2	1/-	1	2	1	D+H/D	-	-	-	-	-	-	2.5/3.3	QSOP28
CH32V203K8T6	144MHz	64K	20K	26	1/3	15	2	1	2/10	10	-	2	1/-	1	2	1	D	-	-	-	-	-	-	2.5/3.3	LQFP32
CH32V203C8T6	144MHz	64K	20K	37	1/3	16	2	1	2/10	10	-	2	2/-	2	4	1	D+H/D	-	-	-	-	-	-	2.5/3.3	LQFP48
CH32V203C8U6	144MHz	64K	20K	37	1/3	16	2	1	2/10	10	-	2	2/-	2	4	1	D+H/D	-	-	-	-	-	-	2.5/3.3	QFN48X7
CH32V203RBT6	144MHz	128K	64K	51	1/3	16	2	1	1/16	16	-	2	2/-	2	4	1	D+H/D	-	10M PHY	-	-	-	-	2.5/3.3	LQFP64M
CH32V208GBU6	144MHz	128K	64K	21	1/4	12	2	1	1/8	8	-	1	1/-	1	2	1	D+H/D	-	10M	5.3	-	-	-	2.5/3.3	QFN28
CH32V208CBU6	144MHz	128K	64K	37	1/4	16	2	1	1/10	10	-	2	2/-	2	4	1	D+H/D	-	-	5.3	-	-	-	2.5/3.3	QFN48
CH32V208RBT6	144MHz	128K	64K	49	1/4	16	2	1	1/16	16	-	2	2/-	2	4	1	D+H/D	-	10M	5.3	-	-	-	2.5/3.3	LQFP64M
CH32V208WBU6	144MHz	128K	64K	53	1/4	16	2	1	1/16	16	-	2	2/-	2	4	1	D+H/D	-	10M	5.3	-	-	-	2.5/3.3	QFN68
CH32V303CBT6	144MHz	128K	32K	37	1/3	16	2	1	2/10	10	2	4	2/-	2	3	1	H/D	-	-	-	-	-	-	2.5/3.3	LQFP48
CH32V303RBT6	144MHz	128K	32K	51	1/3	16	2	1	2/16	16	2	4	2/-	2	3	1	H/D	-	-	-	-	-	-	2.5/3.3	LQFP64M
CH32V303RCT6	144MHz	256K	64K	51	4/4	26	2	1	2/16	16	2	4	3/2	2	8	1	H/D	-	-	-	1	1	-	2.5/3.3	LQFP64M
CH32V303VCT6	144MHz	256K	64K	80	4/4	28	2	1	2/16	16	2	4	3/2	2	8	1	H/D	-	-	-	1	1	FSMC	2.5/3.3	LQFP100
CH32V305FBP6	144MHz	128K	32K	17	4/4	10	2	1	2/1	1	1	-	1/1	2	2	1	-	H/D Built-in PHY	-	-	-	1	-	2.5/3.3	TSSOP20
CH32V305GBU6	144MHz	128K	32K	24	4/4	12	2	1	2/6	6	1	1	3/2	2	5	2	-	H/D Built-in PHY	-	-	1	1	-	2.5/3.3	QFN28
CH32V305RBT6	144MHz	128K	32K	51	4/4	26	2	1	2/16	16	2	4	3/2	2	5	2	OTG	H/D Built-in PHY	-	-	1	1	-	2.5/3.3	LQFP64M
CH32V307RCT6	144MHz	256K	64K	51	4/4	26	2	1	2/16	16	2	4	3/2	2	8	2	OTG	H/D Built-in PHY	1G MAC 10M PHY	-	1	1	-	2.5/3.3	LQFP64M
CH32V307WCU6	144MHz	256K	64K	54	4/4	27	2	1	2/16	16	2	4	3/2	2	8	2	OTG	H/D Built-in PHY	1G MAC 10M PHY	-	1	1	-	2.5/3.3	QFN68
CH32V307VCT6	144MHz	256K	64K	80	4/4	28	2	1	2/16	16	2	4	3/2	2	8	2	OTG	H/D Built-in PHY	1G MAC 10M PHY	-	1	1	FSMC/DVP	2.5/3.3	LQFP100

32-bit Cortex-M General-purpose Series MCUs

Part NO.	Freq	Flash	SRAM	GPIO	Adv/GP Timer	PWM	WDOG	RTC	ADC Unit/CH	Touch key	DAC	OPA	SPI/I²S	I²C	UART	CAN	USB2.0 FS	USB2.0 HS	Ethernet	BLE	SDIO	TRNG	Other Features	VDD	Package
CH32F103C6T6	72MHz	32K	10K	37	1/2	12	2	1	1/10	10	1	-	1/-	1	2	1	D+H/D	-	-	-	-	-	-	3.3/5.0	LQFP48
CH32F103C8U6	72MHz	64K	20K	37	1/3	16	2	1	1/10	10	1	-	2/-	2	3	1	D+H/D	-	-	-	-	-	-	3.3/5.0	QFN48X7
CH32F103C8T6	72MHz	64K	20K	37	1/3	16	2	1	1/10	10	1	-	2/-	2	3	1	D+H/D	-	-	-	-	-	-	3.3/5.0	LQFP48
CH32F103R8T6	72MHz	64K	20K	51	1/3	16	2	1	1/16	16	1	-	2/-	2	3	1	D+H/D	-	-	-	-	-	-	3.3/5.0	LQFP64M
CH32F203C6T6	144MHz	32K	10K	37	1/2	12	2	1	2/10	10	-	2	1/-	1	2	1	D+H/D	-	-	-	-	-	-	2.5/3.3	LQFP48
CH32F203K8T6	144MHz	64K	20K	26	1/3	15	2	1	2/10	10	-	2	1/-	1	2	1	D	-	-	-	-	-	-	2.5/3.3	LQFP32
CH32F203C8T6	144MHz	64K	20K	37	1/3	16	2	1	2/10	10	-	2	2/-	2	4	1	D+H/D	-	-	-	-	-	-	2.5/3.3	LQFP48
CH32F203C8U6	144MHz	64K	20K	37	1/3	16	2	1	2/10	10	-	2	2/-	2	4	1	D+H/D	-	-	-	-	-	-	2.5/3.3	QFN48X7
CH32F203CBT6	144MHz	128K	32K	37	1/3	16	2	1	2/10	10	2	4	2/-	2	3	1	D	-	-	-	-	-	-	2.5/3.3	LQFP48
CH32F203RBT6	144MHz	128K	32K	51	1/3	16	2	1	2/16	16	2	4	2/-	2	3	1	D	-	-	-	-	-	-	2.5/3.3	LQFP64M
CH32F203RCT6	144MHz	256K	64K	51	4/4	26	2	1	2/16	16	2	4	3/2	2	8	1	D	-	-	-	1	1	-	2.5/3.3	LQFP64M
CH32F203VCT6	144MHz	256K	64K	80	4/4	28	2	1	2/16	16	2	4	3/2	2	8	1	D	-	-	-	1	1	FSMC	2.5/3.3	LQFP100
CH32F205RBT6	144MHz	128K	32K	51	4/4	26	2	1	2/16	16	2	4	3/2	2	5	2	OTG	H/D Built-in PHY	-	-	1	1	-	2.5/3.3	LQFP64M
CH32F207VCT6	144MHz	256K	64K	80	4/4	28	2	1	2/16	16	2	4	3/2	2	8	2	OTG	H/D Built-in PHY	1G MAC 10M PHY	-	1	1	FSMC/DVP	2.5/3.3	LQFP100
CH32F208RBT6	144MHz	128K	64K	49	1/4	16	2	1	1/16	16	-	2	2/-	2	4	1	D+H/D	-	10M	5.3	-	-	-	2.5/3.3	LQFP64M
CH32F208WBU6	144MHz	128K	64K	53	1/4	16	2	1	1/16	16	-	2	2/-	2	4	1	D+H/D	-	10M	5.3	-	-	-	2.5/3.3	QFN68

32-bit Enhanced Low-power MCU Series

Part NO.	Freq	Flash	SRAM	GPIO	Adv/GP/LP Timer	WDOG	RTC	ADC Unit/CH	Touch key	OPA	CMP	SPI/I²S	I²C	UART	CAN	USB2.0 FS	USB PD	VDD	Package
CH32V203C8T6	144MHz	64K	20K	37	1/3/-	2	1	2/10	10	2	-	2/-	2	4	1	D+H/D	-	2.5/3.3	LQFP48
CH32F203C8T6	144MHz	64K	20K	37	1/3/-	2	1	2/10	10	2	-	2/-	2	4	1	D+H/D	-	2.5/3.3	LQFP48
CH32L103F8P6	96MHz	64K	20K	16	1/3/1	2	1	1/9	9	1	2	1/-	1	4	1	D	1	3.3	TSSOP20
CH32L103F8U6	96MHz	64K	20K	19	1/3/1	2	1	1/10	10	1	2	2/-	2	4	1	H/D	1	3.3	QFN20
CH32L103G8R6	96MHz	64K	20K	26	1/3/1	2	1	1/10	10	1	3	2/-	2	4	1	H/D	1	3.3	QSOP28
CH32L103K8U6	96MHz	64K	20K	31	1/3/1	2	1	1/10	10	1	3	1/-	1	4	1	H/D	1	3.3	QFN32
CH32L103C8T6	96MHz	64K	20K	37	1/3/1	2	1	1/10	10	1	3	2/-	2	4	1	H/D	1	3.3	LQFP48

32-bit Bluetooth Low Energy Series MCUs

Part NO.	Core	Freq	Flash	SRAM	DataFlash	BLE	USB	Ethernet	TouchKey/ADC	LCD	Timer	PWM	UART/SPI/I²C	GPIO	RTC/WDOG	VDD	Package
CH591	RISC-V	20MHz	192K	26K	32K	5.4	1*D	-	-/6*12b	16*4	4*26b	10	2/1/-	20	√/√	2.3/3.3	QFN28/QFN20/TSSOP16
CH592	RISC-V	20MHz	448K	26K	32K	5.4	1*H/1*D	-	12/12*12b	20*4	4*26b	12	4/1/1	24	√/√	1.7/3.3	QFN32/QFN28
CH581	RISC-V	20MHz	192K	32K	32K	5.3	1*D	-	-/6*12b	-	4*26b	10	2/1/-	20	√/√	2.3/3.3	QFN28
CH582	RISC-V	20MHz	448K	32K	32K	5.3	2*H/2*D	-	14/14*12b	-	4*26b	12	4/1/1	40	√/√	2.3/3.3	QFN48/QFN28
CH583	RISC-V	20MHz	448K	32K	32K	5.3	2*H/2*D	-	14/14*12b	-	4*26b	12	4/2/1	40	√/√	1.7/3.3	QFN48
CH571	RISC-V	20MHz	192K	18K	32K	4.2	1*D	-	-/6*12b	-	4*26b	4	2/1/-	20	√/√	2.3/3.3	QFN28/QFN20
CH573	RISC-V	20MHz	448K	18K	32K	4.2	1*H/1*D	-	10/10*12b	-	4*26b	12	4/1/-	22	√/√	1.7/3.3	QFN32/QFN28
CH32V208GBU6	RISC-V	144MHz	128K	64K	-	5.3	1*H/2*D	10M	8/1*12b	-	4*16b/1*32b	20	2/1/1	21	√/√	2.5/3.3	QFN28
CH32V208CBU6	RISC-V	144MHz	128K	64K	-	5.3	1*H/2*D	-	10/1*12b	-	4*16b/1*32b	20	4/2/2	37	√/√	2.5/3.3	QFN48
CH32V208RBT6	RISC-V	144MHz	128K	64K	-	5.3	1*H/2*D	10M	16/1*12b	-	4*16b/1*32b	20	4/2/2	49	√/√	2.5/3.3	LQFP64M
CH32V208WBU6	RISC-V	144MHz	128K	64K	-	5.3	1*H/2*D	10M	16/1*12b	-	4*16b/1*32b	20	4/2/2	53	√/√	2.5/3.3	QFN68
CH32F208RBT6	Cortex-M3	144MHz	128K	64K	-	5.3	1*H/2*D	10M	16/1*12b	-	4*16b/1*32b	20	4/2/2	49	√/√	2.5/3.3	LQFP64M
CH32F208WBU6	Cortex-M3	144MHz	128K	64K	-	5.3	1*H/2*D	10M	16/1*12b	-	4*16b/1*32b	20	4/2/2	53	√/√	2.5/3.3	QFN68

32-bit Featured Application Series MCUs

Part NO.	Freq	Flash	RAM	USB H/D(含PHY)	ETH	DVP	SDIO	UART	SPI	Timer	CAP/PWM	ADC	I/O	Other Features	VDD	Package
CH32V305FBP6	144MHz	128K	32K	480Mbps	-	-	-	2	1	10*16b	10/10	1*12b	17	TRNG	2.5/3.3	TSSOP20
CH32V305GBU6	144MHz	128K	32K	480Mbps	-	-	1	5	3	10*16b	10/10	6*12b	24	OPA/TRNG	2.5/3.3	QFN28
CH32V305RBT6	144MHz	128K	32K	480Mbps	-	-	1	5	3	10*16b	32/32	16*12b	51	OPA/TRNG	2.5/3.3	LQFP64M
CH32V307RCT6	144MHz	256K	64K	480Mbps	1000M	-	1	8	3	10*16b	32/32	16*12b	51	OPA/TRNG	2.5/3.3	LQFP64M
CH32V307WCU6	144MHz	256K	64K	480Mbps	1000M	-	1	8	3	10*16b	32/32	16*12b	54	OPA/TRNG	2.5/3.3	QFN68
CH32V307VCT6	144MHz	256K	64K	480Mbps	1000M	96MHz	1	8	3	10*16b	32/32	16*12b	80	FSMC/DVP/TRNG	2.5/3.3	LQFP100
CH32F205RBT6	144MHz	128K	32K	480Mbps	-	-	1	5	3	10*16b	32/32	16*12b	51	OPA/TRNG	2.5/3.3	LQFP64M
CH32F207VCT6	144MHz	256K	64K	480Mbps	1000M	96MHz	1	8	3	10*16b	32/32	16*12b	80	FSMC/DVP/TRNG	2.5/3.3	LQFP100
CH561	130MHz	64K	32K	-	100M	-	-	2	2	4*28b	4/4	1*10b	27	-	1.8/3.3	LQFP64M
CH563	130MHz	224K	32K/64K	480Mbps	100M	-	-	2	2	4*28b	4/4	3*10b	74	PARA	1.8/3.3	LQFP128/LQFP64M
CH567	120MHz	192K	32K	480Mbps	-	-	4*UHS	4	2	3*26b	3/7	-	30	LEDC/AES/SM4	3.3	LQFP48
CH568	120MHz	192K	32K	480Mbps	-	-	4*UHS	4	2	3*26b	3/7	-	26	LEDC/SATA/AES/SM4	3.3	LQFP48
CH569	120MHz	448K	48K/80K	5G/480Mbps	1000M	96MHz	1	4	2	3*26b	3/4	-	49	SerDes/HSPI/AES/SM4	3.3	QFN68/QFN40
CH641	48MHz	16K	2K	-	-	-	-	1	-	2*16b	5/5	15*10b	25	QII/ISP/BC/USB PD	5-12	QFN28/QSOP24/QFN20/QFN16
CH643	48MHz	62K	20K	12Mbps	-	-	-	4	1	3*16b	10/10	14*12b	60	LEDPWM/PIOC/USB PD	3.3/5.0	QSOP28/LQFP48/LQFP64/QFN80
CH645	125MHz	224K	80K	480Mbps	100M	-	1	2	2	2*16b	8/8	-	40	USB PD	3.3	QFN68/QFN32

8-bit E8051 USB Series MCUs

Part NO.	Freq	Flash	RAM	DataFlash	USB	TouchKey	Type-C	ADC	LEDC/RGB LED	Timer	CAP	PWM	UART	SPI	I²C	I/O	Built-in OSC/WDOG	VDD	Package
CH541	24MHz	16K	256+256	-	1*D	11	√	12*12b	-/-	3*16b	2	4	1	1	1	17	√/√	3.3/5.0/9.0/12	TSSOP20/SOP16
CH543	24MHz	16K	256+256	-	1*H/1*D	11	PD	12*12b	-/-	3*16b	2	4	1	1	1	17	√/√	3.3/5.0/9.0/12	QFN20
CH549	32MHz	63K	2K+256	1K	1*H/1*D	-	√	16*12b	-/-	3*16b	3	8	4	1	-	44	√/√	3.3/5.0	LQFP48/QFN28/SOP16
CH545	32MHz	63K	8K+256	1K	4*H/17*D	14	-	14*12b	-/8*16	3*16b	2	6	2	2	5	58	√/√	3.3/5.0	LQFP64
CH554	24MHz	16K	1K+256	128	1*H/1*D	6	√	4*8b	-/-	3*16b	2	2	2	1	-	17	√/√	3.3/5.0	TSSOP20/SOP16/MSOP10/QFN16
CH559	56MHz	63K	6K+256	1K	2*H/1*D	-	-	8*11b	1/2/4/-	4*16b	3	3	2	2	-	45	√/√	3.3/5.0	LQFP48/SSOP20
CH555	32MHz	63K	8K+256	1K	1*D	14	-	14*12b	-/8*16	3*16b	2	-	2	2	1	45	√/√	3.3/5.0	LQFP48
CH557	32MHz	63K	8K+256	1K	4*H/1*D	14	-	14*12b	-/8*16	3*16b	2	6	2	2	2	58	√/√	3.3/5.0	LQFP48/LQFP64

8-bit RISC Minimalist Assembly Series MCUs

Part NO.	CodeROM	DataRAM	Freq	Timer	PWM	UART	I/O	OPA	ADC	DAC	ISINK	VDD	Temperature℃	Package	应用
CH521	OTP-1K*16	80	6MHz	2	1	1	4	-	-	-	9bit	3.3(3~12)	-40~105	SOT23-6	USB PD Type-C or analog applications
CH522	OTP-1K5*16	80	6MHz	2	1	-	7+2	-	10bit	9bit	-	3.3(3~12)	-40~105	ESSOP10,QFN16	
CH525	OTP-1K75*16	96	6MHz	2	1	-	6+2	80x	10bit	6bit*3	8bit	3.3(3~12)	-40~105	SSOP10,SOT23-6	
CH527	OTP-2K*16	128	6MHz	2	1	1	6+2	-	-	6bit*2	10bit	3.3(3~20)	-40~105	ESSOP10	
CH531	OTP-1K*16	192	12MHz	2	1	1	11	-	-	-	-	3,3.3,5	-40~85	SOP16/8,SSOP10	USB or IO control
CH532	iFlash-2K*16	256	12MHz	2	1	1	25	-	-	-	-	3,3.3,5	-40~85	SOP28/16,QFN28	

Selection Guide of USB to UART

Selection Guide of USB to UART

USB to Single Serial Chip

Model	USB	Drive model (Note 1)	Maximum peak baud rate	Flow control continuous baud rate	Hardware flow control	Auto-control RS485	USB config	IO voltage (MCU voltage)	PWR saving dual power supply/ prevent backflow	MODEM signal (Both GPIO and other interfaces)	Built-in clock	Temperature range	Package	Core
CH347F	480Mbps High-speed	VCP/CDC/ HID	9Mbps	9Mbps	√	√	内置	3.3V/2.5V/1.8V	√	RTS/CTS/DTR JTAG/SWD/SPI/I²C/GPIO*8	-	-40~+85℃	QFN28	High-speed USB + Multi-interface
CH347T	480Mbps High-speed	VCP/CDC/ HID	9Mbps	9Mbps	√	√	Internal	3.3V	-	RTS/CTS/DTR/DSR/DCD/RI JTAG/SWD/SPI/I²C/GPIO*8	-	-40~+85℃	TSSOP20	High-speed USB + Multi-interface
CH343P	Full-speed	VCP/CDC	6Mbps	6Mbps	√	√	Internal	5V/3.3V/2.5V/1.8V	√	RTS/CTS/DTR/DSR/DCD/RI	√	-40~+85℃	QFN16	3rd generation
CH343G	Full-speed	VCP/CDC	6Mbps	6Mbps	√	√	Lot customization	5V/3.3V/2.5V/1.8V	√	RTS/CTS/DTR/DSR/DCD/RI	√	-40~+85℃	SOP16	3rd generation
CH343K	Full-speed	VCP/CDC	6Mbps	6Mbps	√	-	Lot customization	5V/3.3V/2.5V/1.8V	√	RTS/CTS/DTR	√	-40~+85℃	ESSOP10	3rd generation
CH9102F	Full-speed	VCP/CDC	4Mbps	4Mbps	√	√	Internal	5V/3.3V/2.5V/1.8V	√	RTS/CTS/DTR/DSR/DCD/RI/GPIO*5	√	-40~+85℃	QFN24	3rd generation
CH9102X	Full-speed	VCP/CDC	4Mbps	4Mbps	√	√	Lot customization	3.3V	-	RTS/CTS/DTR/DSR/DCD/RI/GPIO*6	√	-40~+85℃	QFN28X5	3rd generation
CH9101U	Full-speed	VCP/CDC	3Mbps	3Mbps	√	√	Internal	5V/3.3V/2.5V/1.8V	√	RTS/CTS/DTR/DSR/DCD/RI/GPIO*6	√	-40~+85℃	SSOP28	3rd generation
CH9101H	Full-speed	VCP/CDC	3Mbps	3Mbps	√	√	Internal	5V/3.3V/2.5V/1.8V	√	RTS/CTS/DTR/DSR/DCD/RI/GPIO*6	√	-40~+85℃	QFN32X5	3rd generation
CH9101Y	Full-speed	VCP/CDC	3Mbps	3Mbps	√	√	Internal	5V/3.3V/2.5V/1.8V	√	RTS/CTS/DTR/DSR/DCD/RI/GPIO*4	√	-40~+85℃	QFN16X4	3rd generation
CH9101R	Full-speed	VCP/CDC	3Mbps	3Mbps	√	√	Internal	5V/3.3V/2.5V/1.8V	√	RTS/CTS/DTR/DSR/DCD/RI/GPIO*4	√	-40~+85℃	QSOP16	3rd generation
CH9101N	Full-speed	VCP/CDC	3Mbps	3Mbps	-	-	Lot customization	5V/3.3V/2.5V/1.8V	√	-	√	-40~+85℃	SOP8	3rd generation
CH341F	Full-speed	VCP	2Mbps	2Mbps	√	√	External or lot customization	5V/3.3V	-	RTS/CTS/DTR/DSR/DCD/RI/SCL/SDA	Internal External	-20~+70℃ -40~+85℃	QFN28	2rd generation
CH341B	Full-speed	VCP	2Mbps	2Mbps	√	√	External or lot customization	5V/3.3V	-	RTS/CTS/DTR/DSR/DCD/RI/SCL/SDA	Internal External	-20~+70℃ -40~+85℃	SOP28	2rd generation
CH9340K	Full-speed	CDC	1Mbps	230400bps	-	-	Lot customization	5V/3.3V	-	RTS/DTR	√	-20~+85℃	ESSOP10	2rd generation
CH9340C	Full-speed	CDC	1Mbps	230400bps	-	√	Lot customization	5V/3.3V	-	RTS/CTS/DTR/DSR/DCD/RI	√	-20~+85℃	SOP16	2rd generation
CH340B	Full-speed	VCP	2Mbps	460800bps	-	√	Internal	5V/3.3V	-	RTS/CTS/DTR/DSR/DCD/RI	√	-20~+70℃	SOP16	2rd generation
CH340K	Full-speed	VCP	230400bps	230400bps	-	-	-	5V/3.3V/2.5V/1.8V	prevent backflow	DTR/RTS/CTS	√	-20~+70℃	ESSOP10	Classic Optimized
CH340N	Full-speed	VCP	2Mbps	460800bps	-	-	-	5V/3.3V	-	RTS	√	-20~+70℃	SOP8	Classic+
CH340E	Full-speed	VCP	2Mbps	460800bps	-	√	-	5V/3.3V	-	RTS/CTS	√	-20~+70℃	MSOP10	Classic+
CH340C	Full-speed	VCP	2Mbps	460800bps	-	-	-	5V/3.3V	-	RTS/CTS/DTR/DSR/DCD/RI/OUT	√	-20~+70℃	SOP16	Classic+
CH341A	Full-speed	VCP	2Mbps	2Mbps	√	√	External	5V/3.3V	-	RTS/CTS/DTR/DSR/DCD/RI/SCL/SDA	-	-40~+85℃	SOP28	Classic Plus
CH341T	Full-speed	VCP	2Mbps	2Mbps	√	√	External	5V/3.3V	-	SCL/SDA	-	-40~+85℃	SSOP20	Classic Plus
CH340G	Full-speed	VCP	2Mbps	460800bps	-	-	-	5V/3.3V	-	RTS/CTS/DTR/DSR/DCD/RI	-	-40~+85℃	SOP16	Classic
CH340T	Full-speed	VCP	2Mbps	460800bps	-	√	-	5V/3.3V	-	RTS/CTS/DTR/DSR/DCD/RI	-	-40~+85℃	SSOP20	Classic
CH9329	Full-speed	HID	115200bps	115200bps	-	-	Internal	5V/3.3V	-	-	√	-40~+85℃	SOP16	-
CH9143	Full-speed	VCP/CDC	1Mbps	230400bps	√	-	Lot customization	3.3V/2.5V	-	RTS/CTS/DTR/DSR/DCD/RI, Bluetooth wireless transfer	-	-40~+85℃	QFN28	BLE+USB

USB to Multi-Serial Chip

Model	串口数	USB	Drive model (Note 1)	Maximum peak baud rate	Flow control continuous baud rate	Hardware flow control	Auto-control RS485	USB config	IO voltage (MCU voltage)	PWR saving dual power supply/ prevent backflow	MODEM signal (Both GPIO and other interfaces)	Built-in clock	Temperature range	Package	Core
CH347F	2	480Mbps High-speed	VCP/CDC/HID	9Mbps	9Mbps	√	√	Internal	3.3V/2.5V/1.8V	√	RTS/CTS/DTR JTAG/SWD/SPI/I2C/GPIO*8	-	-40~+85℃	QFN28	High-speed USB +Multi-interface
CH347T	2	480Mbps High-speed	VCP/CDC/HID	9Mbps	9Mbps	√	√	Internal	3.3V	-	RTS/CTS/DTR/DSR/DCD/RI JTAG/SWD/SPI/I2C/GPIO*8	-	-40~+85℃	TSSOP20	High-speed USB +Multi-interface
CH342F	2	Full-speed	VCP/CDC	3Mbps	3Mbps	√	√	Internal	5V/3.3V/2.5V/1.8V	√	RTS/CTS/DTR/DSR/DCD/RI	√	-40~+85℃	QFN24	-
CH342K	2	Full-speed	VCP/CDC	3Mbps	3Mbps	√	√	Lot cust-omization	5V/3.3V/2.5V/1.8V	√	-	√	-40~+85℃	ESSOP10	-
CH9103M	2	Full-speed	VCP/CDC	3Mbps	3Mbps	√	√	Internal	5V/3.3V/2.5V/1.8V	√	RTS/CTS/DTR/DSR/DCD/GPIO*12	√	-40~+85℃	QFN40X6	-
CH9342G	2	Full-speed	VCP/CDC	115200bps	115200bps	√	-	Lot cust-omization	5V	-	RTS/CTS	√	-40~+85℃	SOP16	-
CH344L	4	Full-speed	VCP/CDC	230400bps	230400Mbps	√	√	Internal	3.3V	-	RTS/CTS/GPIO*12	Internal/ External	-40~+85℃	LQFP48	-
CH344Q	4	480Mbps High-speed	VCP/CDC	6Mbps	6Mbps	√	√	Internal	3.3V	-	RTS/CTS/DTR/DSR/DCD/RI/GPIO*16	External	-40~+85℃	LQFP48	-
CH9114L	4	480Mbps High-speed	VCP/CDC	15Mbps	15Mbps	√	√	Internal	3.3V/2.5V/1.8V	√	RTS/CTS/DTR/DSR/DCD/RI/GPIO*24	-	-40~+85℃	LQFP64M	-
CH9114W	4	480Mbps High-speed	VCP/CDC	15Mbps	15Mbps	√	√	Internal	3.3V/2.5V/1.8V	√	RTS/CTS/DTR/DSR/DCD/RI/GPIO*24	-	-40~+85℃	QFN56	-
CH9114F	4	480Mbps High-speed	VCP/CDC	15Mbps	15Mbps	√	√	Internal	3.3V/2.5V/1.8V	√	RTS/CTS/DTR/RI/GPIO*12	-	-40~+85℃	QFN32	-
CH9344Q	4	480Mbps High-speed	VCP	12Mbps	12Mbps	√	√	Internal	3.3V/2.5V/1.8V	√	RTS/CTS/DTR/DSR/DCD/RI/GPIO*12	-	-40~+85℃	LQFP48	-
CH9344L	4	480Mbps High-speed	VCP	12Mbps	12Mbps	√	√	Lot cust-omization	3.3V/2.5V/1.8V	√	RTS/CTS/DTR/DSR/DCD/RI/GPIO*12	-	-40~+85℃	LQFP48	-
CH9104L	4	Full-speed	VCP/CDC	6Mbps	6Mbps	√	√	Internal	3.3V	-	RTS/CTS/DTR/DSR/DCD/RI/GPIO*24	√	-40~+85℃	LQFP48	-
CH348L	8	480Mbps High-speed	VCP	6Mbps	6Mbps	√	√	Internal	3.3V/2.5V/1.8V	√	RTS/CTS/DTR/DSR/DCD/RI/GPIO*48	-	-40~+85℃	LQFP100	-
CH348Q	8	480Mbps High-speed	VCP	6Mbps	6Mbps	√	√	Internal	3.3V	√	RTS/CTS/GPIO*12	-	-40~+85℃	LQFP48	-

Driver Type

WCH provides a variety of USB serial port drivers to choose from, supporting Windows/Linux/Android/macOS and other operating systems. Driver type description:

VCP: The vendor provides an emulation serial port driver and supports each operating system, which is multi-function and high efficiency, supports high baud rate communication, hardware flow control, GPIO, and other functions.
The driver only needs to be installed once, and it can also be installed automatically by networking.

HID: All operating systems have built-in such drivers. Users do not need to install the driver; the disadvantage is that the rate is low, only 115200bps, and cannot emulate the serial port and use conventional serial port application software.

CDC: Lower than Windows 10 operating system version. Need to install the driver. Because of the CDC class protocol and class driver, the CDC serial port function is not as complete as VCP, and some use differences exist.

CH32V006

QingKe RISC-V core
Wide-voltage value MCUs

CH32V006 series is based on QingKe V2C core industrial-grade general-purpose microcontrollers, support 48MHz system frequency, with a wide range of voltage, low-power consumption, single and dual-wire debugging, and other features. On-chip 12-bit ADC supports a 3M sampling rate, built-in P-terminal pollable OPA to support high-voltage swing rate high-speed mode, providing dual-serial port, SPI, I2C, touch keys, and other peripheral resources.

Block Diagram

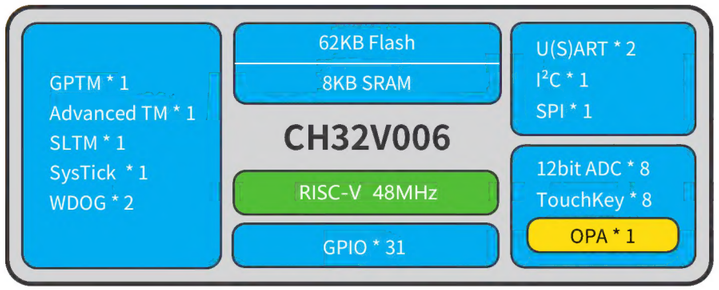

Features

- QingKe RISC-V2C core, support 2-level interrupt nesting
- Up to 48MHz system main frequency
- 8KB SRAM, 62KB Flash
- Wide-voltage: 2~5V
- Low-power mode: Sleep, Standby
- Power-on/power-down, programmable voltage detector
- 7-channel general-purpose DMA controller
- 1 OPA, P terminal supports 3-channel polling, supports high-speed mode, multi-step gain optional 12-bit ADC, 8-channel external channel, Support 3M sampling rate
- 1 × 16-bit advanced-control timer, 1 × 16-bit general-purpose timer, 1 × 16-bit streamlined timer
- 2 watchdog timers (independent and window), 1 SysTick timer
- 2 USART, 1 I2C interface, 1 SPI interface
- 96-bit chip unique ID
- Support 1-wire/2-wire serial debug interface
- Package: QFN32, QSOP24, QFN20, TSSOP20, QFN12

Others

CH32V007/5/2 series: 62~16KB Flash, provide package options.

CH32V003 series: Based on QingKe RISC-V2A core, 48MHz main frequency, 3.3V/5V power supply, support SDI.

Main Resource

Typical product models		CH32V006 K8U6	CH32V006 E8R6	CH32V006 F8U6	CH32V006 F8P6	CH32V005 E6R6	CH32V005 F6U6	CH32V005 D6U6
Core		RISC-V						
Flash (KB)		62				32		
SRAM (KB)		8				6		
GPIO		31	22	18	18	22	18	11
Timer	Advanced-control (16-bit)	1						
	General-purpose (16-bit)	1						
	Streamlined (16-bit)	1				-		
	WDOG	2						
	SysTick	1						
ADC/TouchKey (Unit/Channels)		1/8				1/8 (NO TouchKey)		1/4 (NO TouchKey)
OPA Operational amplifier		1						
Communication interface	U (S) ART	2						
	SPI	1						-
	I²C	1						
System Frequency (MHz)		48						
VDD(V)		2~5						
Package		QFN32	QSOP24	QFN20	TSSOP20	QSOP24	QFN20	QFN12

Note: For more models, please refer to MCU Selection Table

Applications

Motor drives and application control

Health care

Consumer electronics

Computer & Cell Phone Peripherals

CH32X035

QingKe RISC-V core USB communication and PD power Dual function Type-C interface MCU

CH32X035 series is an industrial-grade microcontroller designed based on the QingKe V4C core. CH32X035 has built-in USB and PD PHY, supports USB Host and USB Device function, PDUSB and Type-C fast charging function, built-in programmable protocol I/O controller, provides OPA, CMP, USART, serial port, I2C, SPI, Timer, 12-bit ADC, Touchkey and other rich peripheral resources.

Block Diagram

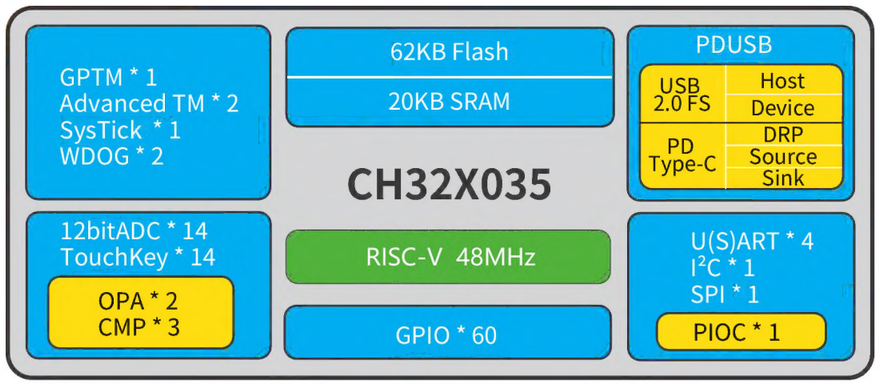

Features

- RISC-V4C processor, up to 48MHz
- Support single-cycle multiplication and hardware division
- 20KB SRAM, 62KB Flash
- Multiple low-power modes: Sleep/Stop/Standby
- Power-on/down reset, programmable voltage detector
- 8-channel general DMA controller
- Programmable Protocol I/O Controller PIOC
- 2 sets of OPA/PGA/voltage comparator
- 3 sets of analog voltage CMP
- Multi external 12-bit ADC conversion channels
- Multi-TouchKey channel detection
- 2×16-bit advanced-control timer
- 1×16-bit general-purpose timer
- 2 watchdog timers (independent and window)
- 1 SysTick timer
- 4 USART: support LIN and ISO7816
- 1 I^2C interface: support SMBus/PMBus
- 1 SPI interface
- USB2.0 full-speed controller & PHY
- USB PD and Type-C controllers and PHYs
- Fast GPIO port, supports 24 external interrupts
- 96-bit chip unique ID
- 2-wire SDI
- Package form: LQFP64M, LQFP48, QFN28, QSOP28, QFN20, TSSOP20

Main Resource

Typical product models		CH32X035 R8T6	CH32X035 C8T6	CH32X035 G8U6	CH32X035 G8R6	CH32X035 F8U6	CH32X035 F7P6	CH32X033 F8P6
Core		RISC-V						
Flash (KB)		62						
SRAM (KB)		20						
GPIO		60	46	27	26	19	18	18
Timer	Advanced-control (16-bit)	2						
	General-purpose (16-bit)	1						
	WDOG	2						
	SysTick	1						
ADC/TouchKey (Unit/Channels)		1/14	1/10	1/10	1/11	1/10	1/11	1/10
OPAO perational amplifier		2					1	2
CMP Comparator (Group)		3	3	1	3	-	1	2
PIOC		1						
Commu-nication interface	U (S) ART	4				3		4
	SPI	1						
	I^2C	1						
	USB(FS)	Host/Device				Device		
	USB PD and Type-C	Source/Sink/DRP						-
System Frequency (MHz)		48						
VDD(V)		3.3/5.0						
Package		LQFP64M	LQFP48	QFN28	QSOP28	QFN20	TSSOP20	TSSOP20

PDUSB

Note: For more models, please refer to MCU Selection Table

Applications

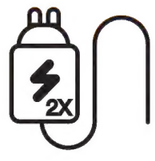

PD charging

Industrial control

Consumer electronics

Computer & Cell Phone Peripherals

CH32V103
CH32F103

QingKe RISC-V/Cortex-M3 Core 3.3V/5V Rated Voltage General-purpose MCUs

CH32V103 series is a 32-bit general-purpose microcontroller centered on the QingKe V3A microprocessor, designed based on the RISC-V open-source instruction set. On-chip integrated clock security mechanism, multi-level power management, general-purpose DMA controller. This series has 1 channel USB2.0 host/device interface, multi-channel 12-bit ADC converter module, multi-channel TouchKey, multi-set Timer, multi-channel I2C/USART/SPI interface and other rich peripheral resources.

Block Diagram

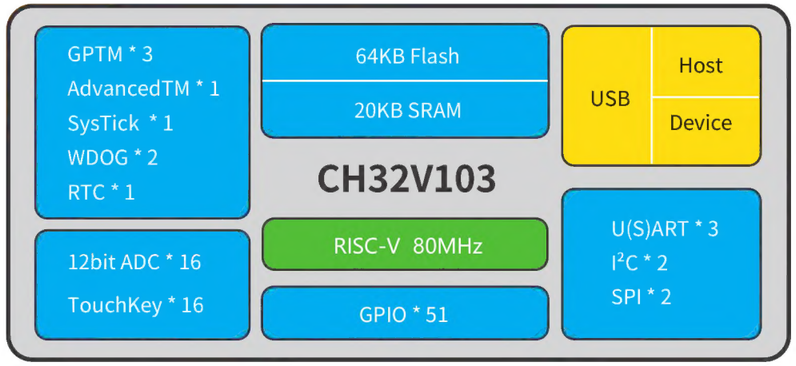

Features

- RISC-V3A processor, up to 80MHz system frequency
- Support single-cycle multiplication and hardware division
- 20KB SRAM, 62KB Flash
- Power supply range: 2.7V-5.5V, GPIO synchronized supply voltage
- Multi low-power mode: Sleep/Stop/Standby
- Power-on/down reset (POR/PDR)
- Programmable voltage detector (PVD)
- 7-channel DMA controller
- 16-channel TouchKey channel detection
- 7 timers
- 1 USB2.0 host/device interface (Full- and low-speed)
- 2 I²C interface (Support SMBus/PMBus)
- 3 USART interface
- 1 SPI interface (Support Master and Slave mode)
- 51 I/Os, all I/Os can be mapped to 16 external interrupts
- CRC calculation unit, 96-bit chip unique ID
- 2-wire SDI

  Package form: LQFP64M, LQFP48, QFN48×7

Main Resource

Typical product models		CH32V103R8T6	CH32V103C8T6	CH32F103R8T6	CH32F103C8T6
Core		RISC-V		Cortex-M3	
Flash (KB)		64			
SRAM (KB)		20			
GPIO		51	37	51	37
Timer	Advanced-control (16-bit)	1			
	General-purpose (16-bit)	3			
	WDOG	2			
	SysTick	1			
RTC		1			
ADC/TouchKey(Unit/Channels)		1/16	1/10	1/16	1/10
DAC (Unit)		-	-	1	1
Communication interface	U (S) ART	3			
	SPI	2			
	I²C	2			
	CAN	-	-	1	1
	USB (FS)	Host/Device	Host/Device	Device+Host/Device	Device+Host/Device
System Frequency (MHz)		80		72	
VDD(V)		3.3/5.0			
Package		LQFP64M	LQFP48	LQFP64M	LQFP48

Note: For more models, please refer to MCU Selection Table

Applications

Industrial control

Health care

Safety monitoring

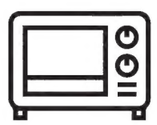
Consumer electronics

CH32L103

QingKe RISC-V Core PDUSB Low Power General-purpose MCUs

CH32L103 series is an industrial-grade low-power general-purpose microcontroller designed based on QingKe RISC-V core. CH32L103 has built-in USB and PD PHY to support PDUSB, including USB Host and USB Device function, USB PD and Type-C fast charging function, built-in low-power timer, providing 1 set of OPA, Multiple CMP, multiple USART, I2C, SPI, 1 CAN FD interface, numerous timers, 12-bit ADC, Touchkey and other rich peripheral resources.

Block Diagram

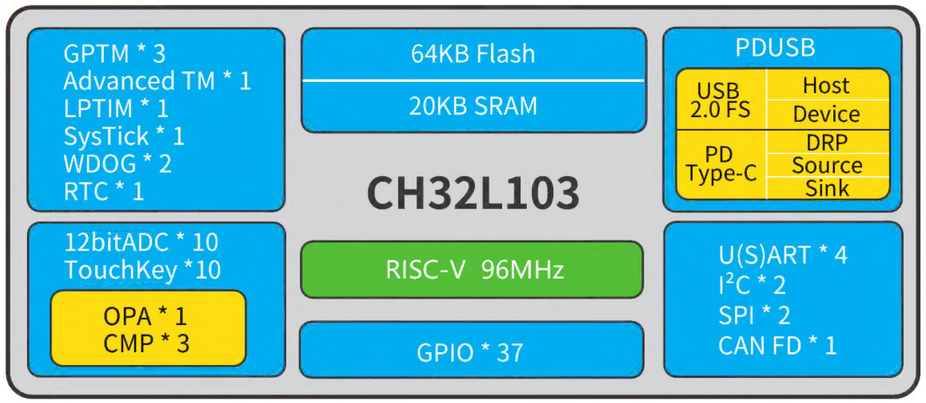

Features

- RISC-V4C processor, system frequency up to 96MHz
- Support single-cycle multiplication and hardware division
- 20KB SRAM, 64KB Flash
- Multi low-power mode: Sleep/Stop/Standby
- Power-on/down reset (POR/PDR), Programmable voltage detector (PVD)
- 8-channel general-purpose DMA controller
- 1 set of OPA/PGA/CMP
- 3 sets of CMP
- 10 external 12-bit ADC conversion channels
- 10 Touchkey channel detection
- 16-bit low-power timer
- 2×16-bit general-purpose timer
- 1×32-bit general-purpose timer
- 2 watchdog timers (independent and window)
- 1 SysTick timer
- 4 sets of USART
- 2 I²C interface: support SMBus/PMBus
- 2 SPI interface
- 1 set of CAN FD interface (2.0B active)
- USB2.0 full-speed controller and PHY
- USB PD and Type-C controller and PHY
- Fast GPIO port, supports 16 external interrupt
- 96-bit chip unique ID
- 2-wire SDI
- Package form: LQFP48, QFN32, QSOP28, QFN20, TSSOP20

Main Resource

Typical product models		CH32L103C8T6	CH32L103K8U6	CH32L103G8R6	CH32L103F8U6	CH32L103F8P6
Core		RISC-V				
Flash (KB)		64K				
SRAM (KB)		20K				
GPIO		37	31	26	19	16
Timer	Advanced-control (16-bit)	1				
	General-purpose (16-bit)	2				
	General-purpose (16-bit)	1				
	Low-power (LPTIM)	1				
	WDOG	2				
	SysTick	1				
RTC		1				
ADC/TouchKey(Unit/Channels)		1/10				1/9
OPA		1				
CMP		3	3	3	3	2
Commu-nication interface	U (S) ART	4				
	SPI	2	1	2	2	1
	I²C	2	1	2	2	1
	CAN FD	1				
	USB(FS)	Host/Device				Device
	USB PD and Type-C	DRP/Source/Sink				
System Frequency (MHz)		96				
VDD(V)		3.3				
Package		LQFP48	QFN32	QSOP28	QFN20	TSSOP20

PDUSB

Note: For more models, please refer to MCU Selection Table

Applications

PD charging

Industrial control

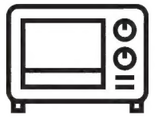

Consumer electronics

Computer & Cell Phone Peripherals

CH32V303
CH32V203
CH32F203

QingKe RISC-V/Cortex-M3 core
High-capacity general-purpose MCU
8 serial ports, 10 timers

CH32V303 series is a 32-bit general-purpose microcontroller with a QingKe V4F microprocessor as the core and a system frequency of 144MHz. In particular, 4 sets of OPA comparators can be added with the ADC and TIMx unit to achieve the signal amplification sampling and output comparison. In addition, there are CAN controllers, USB2.0 device controllers, SDIO host controllers, FSMC memory, and other specialized interfaces to meet the needs of various applications in the industrial, medical, consumer, and other markets.
CH32V203 series are 32-bit general-purpose microcontrollers with the QingKe V4B microprocessor as the core.

Block Diagram

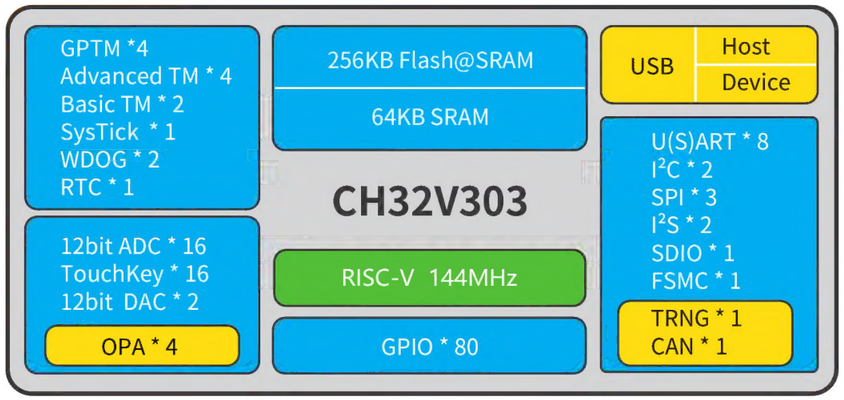

Features

- RISC-V4F processer, up to 144MHz system frequency
- Support single-cycle multiplication and hardware division
- 64KB SRAM, 256KB Flash
- GPIO unit independent power supply can supplied by different
- Multi low-power mode: Sleep/Stop/Standby
- Power-on/down reset (POR/PDR)
- Programmable voltage detector (PVD)
- 2 sets of 18-channel DMA controller
- 4 sets of OPA, CMP
- 1 TRNG
- 2×12-bit DAC
- 16 TouchKey channel detection
- 16×12-bit ADC conversion channel
- 10 timer
- 1 USB2.0 FS host/device interface
- 1 CAN interface (2.0B active)
- SDIO host interface
- FSMC memory interface
- 1 I²C interface
- 3 USART and 5 UART
- 3 SPI interface (support Master and Slave mode)
- 80 I/Os, all mapped to 16 external interrupts
- CRC calculation unit, 96-bit chip unique ID
- 2-wire SDI
- Package form: QFN48, LQFP48, LQFP64M, LQFP100

Main Resource

Typical product models		CH32V303VCT6	CH32V303RCT6	CH32F203VCT6	CH32F203RCT6
Core		RISC-V (FPU)		Cortex-M3	
Flash (KB)		256			
SRAM (KB)		64			
GPIO		80	51	80	51
Timer	Advanced-control (16-bit)	4			
	General-purpose (16-bit)	4			
	Basic (16-bit)	2			
	WDOG	2			
	SysTick	1			
RTC		1			
ADC/TouchKey(Unit/Channels)		2/16			
DAC (Unit)		2			
OPA, CMP		4			
TRNG		1			
Communication interface	U (S) ART	8			
	SPI	3			
	I²S	2			
	I²C	2			
	CAN	1			
	SDIO	1			
	USB (FS)	Host/Device		Device	
	FSMC	1	-	1	-
System Frequency (MHz)		144			
VDD(V)		2.5/3.3			
Package		LQFP100	LQFP64M	LQFP100	LQFP64M

Note: For more models, please refer to MCU Selection Table

Applications

Industrial control

Health care

Safety monitoring

Consumer electronics

CH32V307
CH32V305
CH32F207
CH32F205

QingKe RISC-V/Cortex-M3 Core High-speed Interconnect MCU

CH32V307 interconnect is a 32-bit general-purpose microcontroller with QingKe V4F floating-point microprocessor as the core, with a maximum operating frequency of 144MHz. In addition to the standard clock design, power supply, general-purpose DMA, storage, etc., it has added 4 sets of OPA, USB2.0 full-speed OTG interface, USB2.0 high-speed 480Mbps host/device interface, and integrated PHY. Gigabit Ethernet (MAC), DVP, 2 CAN controllers, etc. In addition, the number of common peripherals such as USART, SPI, I2S, I²C, ADC, and TIMx has also been expanded, which is suitable for comprehensive application scenarios with multiple acquisition and communication directions.

Block Diagram

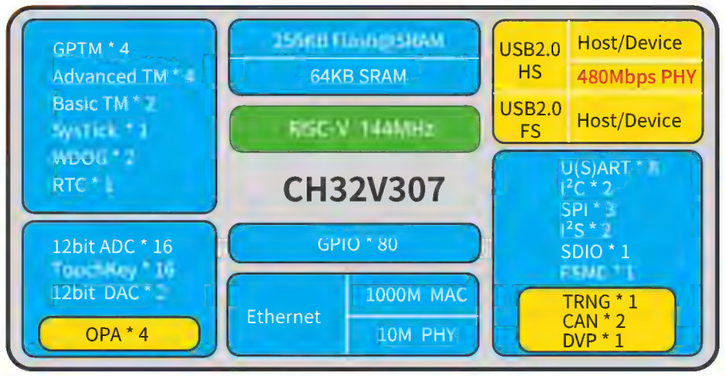

Features

- RISC-V4F processor, up to 144MHz system frequency
- Supports single-cycle multiplication and hardware division
- Hardware floating-point support
- 64KB SRAM, 256KB Flash
- GPIO units powered independently, not synchronized with the system power supply
- Multiple low-power modes: Sleep/Stop/Standby
- Power-on/Power-down Reset (POR/PDR)
- 2 sets of 18-channel DMA controllers
- 4 OPA, CMP
- 1 TRNG
- 2 sets of 12-bit DAC converters
- 16 TouchKey channel detection
- 2 units of 16 12-bit ADC conversion
- 10 timer
- USB2.0 full-speed OTG interface
- USB2.0 high-speed 480Mbps host/device interface (built-in PHY)
- 2 CAN interfaces (2.0B active)
- 2 I²C interface
- 3 USART and 5 UART
- 3 SPI interfaces (support Master and Slave modes)
- SDIO host interface
- FSMC memory interface
- Digital Video Port DVP
- Gigabit Ethernet Controller ETH (built-in 10M PHY)
- 80 I/Os, all IO ports can be mapped to 16 external interrupts
- CRC calculation unit, 96-bit chip unique ID
- 2-wire SDI
- Package: LQFP64M, LQFP100

Main Resource

Typical product models		CH32V307VCT6	CH32V305RBT6	CH32F207VCT6	CH32F205RBT6
Core		RISC-V (FPU)		Cortex-M3	
Flash (KB)		256	128	256	128
SRAM (KB)		64	32	64	32
GPIO		80	51	80	51
Timer	Advanced-control (16-bit)	4			
	General-purpose (16-bit)	4			
	Basic (16-bit)	2			
	WDOG	2			
	SysTick	1			
RTC		1			
ADC/TouchKey(Unit/Channels)		2/16			
DAC (Unit)		2			
OPA, CMP		4			
TRNG		1			
Communication interface	U (S) ART	8	5	8	5
	SPI	3			
	I²S	2			
	I²C	2			
	CAN	2			
	SDIO	1			
	DVP	1	-	1	-
	USB (FS)	OTG			
	USB (HS)	Host/Device (480Mbps)			
	Ethernet	1G MAC+10M PHY	-	1G MAC+10M PHY	-
	FSMC	1	-	1	-
System Frequency (MHz)		144			
VDD(V)		2.5/3.3			
Package		LQFP100	LQFP64M	LQFP100	LQFP64M

Note: For more models, please refer to MCU Selection Table

Applications

Industrial control

IoT

Health care

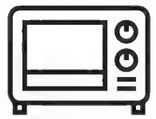

Consumer electronics

CH32V208
CH32F208

QingKe RISC-V/Cortex-M3 core BLE wireless MCU

CH32V208 is a 32-bit general-purpose microcontroller with a QingKe V4C microprocessor at its core, with a maximum operating frequency of 144MHz and on-chip integration of a BLE communication module, an Ethernet controller and transceiver, a USB2.0 full-speed device + host/device interface, a CAN controller, a clock, a power supply, a general-purpose DMA, and a memory.

Block Diagram

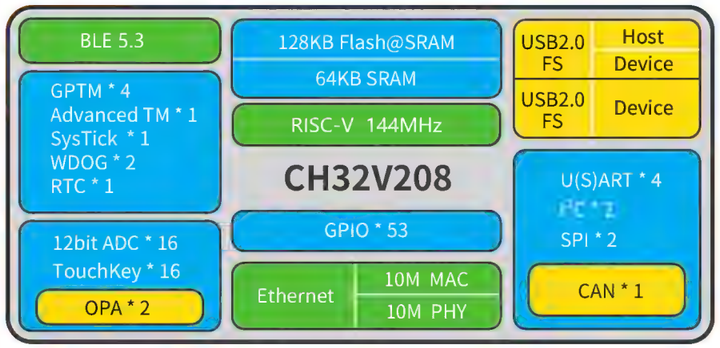

Features

- RISC-V4C processor, up to 144MKz system frequency
- Support single-cycle multiplication and hardware division
- 64KB SRAM, 128KB Flash
- 10M Ethernet controller ETH (MAC+PHY)
- Bluetooth Low Energy BLE 5.3
- GPIO units powered independently, not synchronized withthe system power supply
- Multiple low-power modes: Sleep/Stop/Standby
- Power-On/Power-Down Reset (POR/PDR)
- Programmable Voltage Detector (PVD)
- 2 sets of OPA, CMP
- 16 TouchKey channel detection
- 16×12-bit ADC conversion channel
- 5 timers
- USB2.0 Full-speed host/device+device interface
- 1 CAN interface (2.0B active)
- 2 I^2C interface
- 4 USART
- 2 SPI interface (support Master and Slave)
- 53 I/Os
- CRC calculation unit, 96-bit chip unique ID
- 1-wire SDI
- Package form: LQFP64M, QFN68, QFN48, QFN28

Main Resource

Typical product models		CH32V208WBU6	CH32V208RBT6	CH32F208WBU6	CH32F208RBT6
Core		RISC-V		Cortex-M3	
Flash (KB)		128			
SRAM (KB)		64			
GPIO		53	49	53	49
Timer	Advanced-control (16-bit)	1			
	General-purpose (16-bit)	3			
	General-purpose (32-bit)	1			
	WDOG	2			
	SysTick	1			
RTC		1			
ADC/TouchKey(Unit/Channels)		1/16			
OPA, CMP		2			
Communication interface	U (S) ART	4			
	SPI	2			
	I^2C	2			
	CAN	1			
	USB (FS)	Device+Host/Device			
	Ethernet	10M MAC+10M PHY			
	BLE	5.3			
System Frequency (MHz)		144			
VDD(V)		2.5/3.3			
Package		QFN68	LQFP64M	QFN68	LQFP64M

Note: For more models, please refer to MCU Selection Table

Applications

Industrial control

IoT

Computer & Cell Phone Peripherals

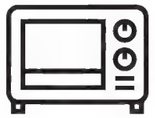

Consumer electronics

CH32M系列

QingKe RISC-V core

Built-in pre-drive motor control MCU

CH32M series is designed for motor control, equipped with QingKe RISC-V microprocessor, built-in 48V gate driver Pre-Driver, and LDO, with simple peripheral circuits, low hardware BOM cost, and small product Layout area. The chip supports single-cycle multiplication and hardware division, integrates rich peripherals such as ADC, multi-set analog CMP, multi-set OPA/PGA, multi-timers, and multi-channel PWM, and provides mature motor algorithm libraries and efficient development tools

Block Diagram

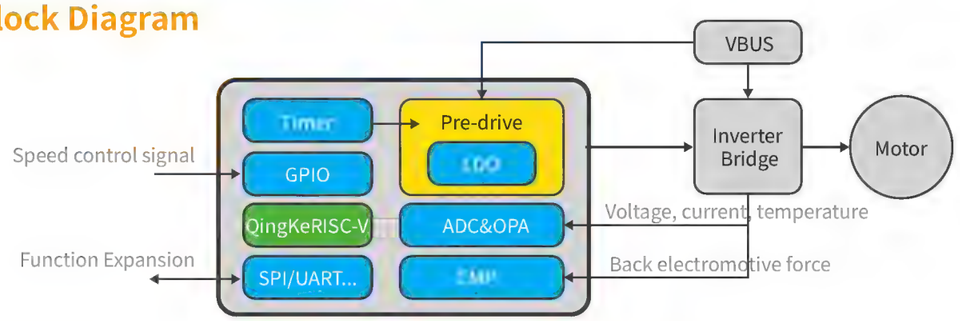

Features

- Integrated 48V motor pre-drive, no need for external gate drivers
- Multi-layer QingKe RISC-V cores, up to 144MHz system frequency
- Multiple analog CMP, OPA, timers, PWMs, ADCs and other rich peripheral resources
- Support PMSM, BLDC, SRM, IM, DC and other motor types
- Simple peripheral circuit, low hardware BOM cost, small Layout area
- Protection mechanisms such as blocking, over/under-voltage,over-current, over-temperature, over/under-speed, phase failure, etc.
- Provide perfect motor algorithm library, reduce development difficulty and improve development efficiency

Tools

Self-developed virtual oscilloscope software

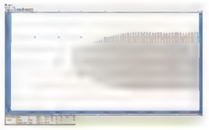

Reduced development cycle

Rapid analysis and diagnosis

Fast data transfer speeds

Support waveform export/import, zoom, coordinate capture function

MounRiver Studio (MRS)

Professional embedded project development, debugging environment

Provide burn-in tools and complete project management functions

Solutions

BLDC

- HALL sense
- ENCODER sense
- ADC detects no sense
- CMP detects no sense
- Dual closed-loop current and speed

PMSM

- HALL sense
- ENCODER sense
- Homogeneous
- SMO
- High-frequency injection
- Rotational counter potential
- Magnetic chain senseless

Applications

CH32M007 and other built-in pre-driven motor control series MCUs, CH32V007, CH32X035, CH32L103, CH32V203, CH32V303, and other non-pre-driven models are suitable for motor applications. Common scenarios are:

- Intelligent home: High-speed air blower/high-speed vacuum cleaner range hood/floor fan/fascia gun...
- Industrial device: Industrial fans/pumps...
- Power tools: Electric drill/electric wrench/angle grinder/electric scissors/electric saw/lawn blower/lawn mower...
- Sports travel: Scooter/Treadmill...

CH564 CH563

QingKe RISC-V core

480Mbps High-Speed USB and 100Mbps Ethernet MCU

CH564 has a built-in USB2.0 high-speed controller and PHY, Ethernet MAC and 10M/100M PHY, PD controller and PHY; it supports PDUSB and can realize high-speed USB data transmission and Type-C power transmission in a single chip. The chip integrates external bus interface XBUS, 8-bit passive parallel port SLV, 12-bit ADC, multi-set timer, multi-set serial port, I2C, SPI, and other rich peripheral resources, which is suitable for all kinds of application scenarios involving high-speed interface communication.

Block Diagram

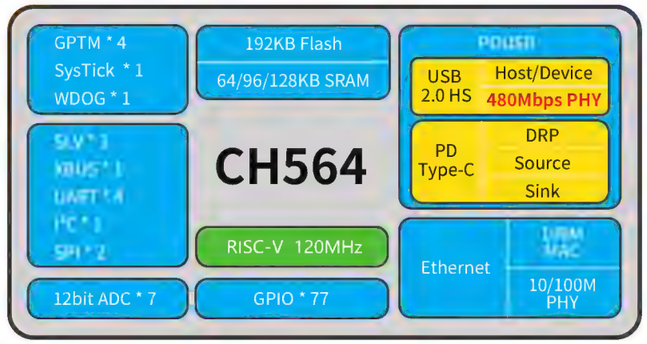

Features

- RISC-V4J processor, up to 120MHz system frequency
- Support single-cycle multiplication and hardware division
- Available with 64/96/128KB SRAM
- 192KB CodeFlash, 32KB DataFlash
- Low-power consumption modes: Sleep/Deep sleep
- 480Mbps USB2.0 high-speed interface, support host/device mode
- Built-in high-speed USB PHY, no need for external PHY transceiver
- USB PD and Type-C controller and PHY
- 10M/100M Ethernet interface, MAC and PHY fully integrated
- 12-bit ADC, 7 external channels
- 4 × 28-bit general-purpose timers
- 1 SysTick timer
- 4 serial ports, 1 I2C, 2 SPI
- 1 8-bit passive parallel port, 1 external bus interface
- 3 GPIOs, 77 I/O ports, partially 5V tolerant
- 96-bit chip unique ID
- Support 1-wire / 2-wire debugging modes
- Package: QFN28, LQFP64M, LQFP128

Model Selection Guide

Part NO.	Freq	CodeFlash	DataFlash	SRAM	GPIO	GP Timer	PWM	CAP	ADC	PDUSB		Ethernet 10/100M MAC+PHY	SLV	XBUS	UART	I²C	SPI	Package
										USB2.0 HS 480Mbps	Type-C Source Sink DRP							
CH564L	120MHz	192K	32K	64/96/128K	77	4*28bit	4	4	7+2	H/D	√	√	1	1	4	1	2	LQFP128
CH564Q	120MHz	192K	32K	64/96/128K	30	4*28bit	4	4	6+2	H/D	√	√	1	-	4	1	2	LQFP64M
CH564F	120MHz	192K	32K	64/96/128K	16	4*28bit	3	3	4+2	H/D	√	√	1	-	4	1	2	QFN28

CH554
CH552
CH551

8-bit USB and Touchkey MCU
Cost-effective, ultra-small package

The CH554 is an enhanced MCS51-compatible microcontroller with embedded USB full-speed host and device controllers and a 6-channel capacitive detection module that supports up to 15 Touchkey. Built-in USB Type-C CC controller (supports current detection and configuration). It provides dual asynchronous serial ports, master-slave SPI, 2-channel signal capture, 2-channel PWM, ADC, and other common function modules.

Block Diagram

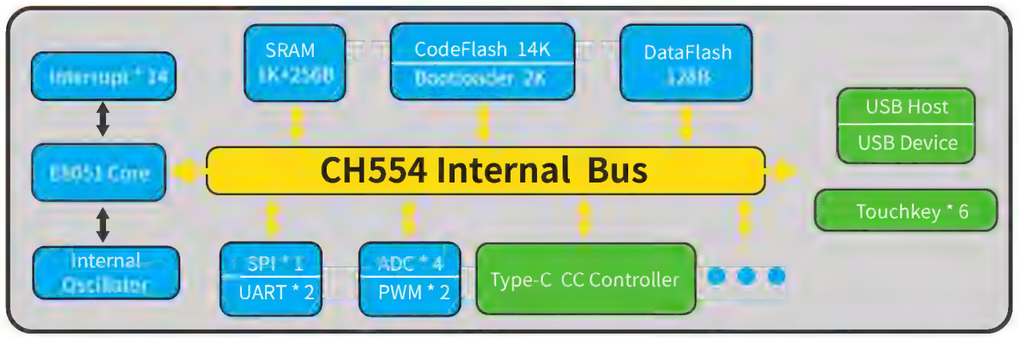

Features

- Enhanced E8051 core
- 1KB+256B RAM, 128B DataFlash
- USB2.0 full-speed Host/Device
- Type-C CC controller
- 4-channel 8-bit ADC
- Embedded 6-channel capacitive detection module, support up to 15 Touchkeys
- 14KB CodeFlash, 2KB BootLoader
- Support USB and serial port ISP
- 2-channel UART, 1-channel SPI
- 3 sets of Timer, 2 sets of CAP, 2 sets of PWM
- Built-in clock and PLL, optional external crystal oscillator

Model Selection Guide

Part NO.	RAM	CodeFlash	DataFlash	USB2.0 FullSpeed	Touch key	Type-C	Timer	UART	Other	Package
CH551	512B+256B	10KB	128B	Device	5/10	-	3*16b 2*CAP	1	2*PWM 1*SPI	SOP16
CH552	1KB+256B	16KB	128B	Device	6/15	Y	3*16b 2*CAP	2	2*PWM 1*SPI 4*ADC	TSSOP20 SOP16 QFN16 MSOP10
CH554	1KB+256B	16KB	128B	Host/Device	6/15	Y	3*16b 2*CAP	2	2*PWM 1*SPI 4*ADC	TSSOP20 SOP16 QFN16 MSOP10

Applications

Type-C cable
One-Card system
Small appliance
Instrumentation
Handheld devices

CH549
CH548
CH547
CH546

8-bit USB and TouchKey MCU
8-bit enhanced multi-interface USB MCU Support Type-C PD

The CH549 is an enhanced MCS51-compatible microcontroller with embedded USB full-speed host and device controllers, USB PD and Type-C CC control, provides 4 sets of asynchronous serial ports, 8 PWMs, 1 master-slave SPI, 16 12-bit ADCs, voltage comparison, and 3 signal captures, and supports up to 44 GPIOs.

Block Diagram

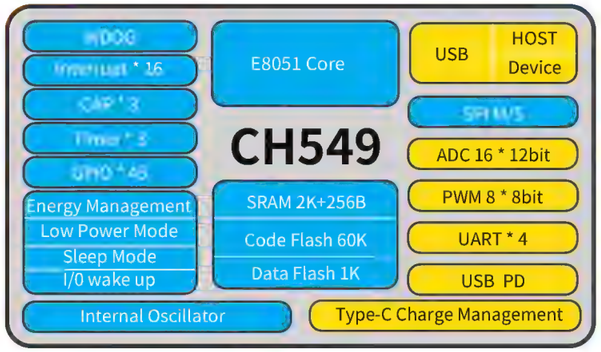

Features

- Enhanced E8051 core
- 60KB CodeFlash, 3KB BootLoader
- 2KB+256B RAM, 1KB DataFlash
- Support USB and serial port ISP
- USB2.0 full-speed Host/Device
- Type-C CC controller
- 16-channel 12-bit ADC
- Support 16-channel capacitive Touchkey detection
- 4 groups of UART, 1-channel SPI
- 3 groups of Timer, 3-channel CAP, 8-channel PWM
- Built-in clock and PLL, optional external crystal

Model Selection Guide

Part NO.	RAM	CodeFlash	DataFlash	USB2.0 FullSpeed	Type-C	ADC	UART	SPI	GPIO	Package
CH549	2KB+256B	63KB	1KB	Host/Device	Y	16*12b	4	1	44	SOP16 QFN28 LQFP48
CH548	2KB+256B	35KB	1KB	Host/Device	Y	16*12b	2	1	44	SOP8 SOP16 LQFP48
CH547	1KB+256B	63KB	1KB	Device	-	12*12b	4	1	44	SOP16 QFN28 LQFP48
CH546	1KB+256B	35KB	1KB	Device	-	8*12b	1	1	44	SOP16 LQFP48

Applications

Mechanical Keyboards
One-Card System
Small appliance
Handheld devices
Gaming peripheral
Instrumentation

CH643
CH555

QingKe RISC-V core

Support full internal drive RGB full color keyboard MCU with Type-C

It supports USB data communication, PD power transfer, and fast charging. The chip has a built-in PIOC programmable protocol I/O controller. The fully built-in RGB display driver supports 192 sets of RGB tri-color LEDs or 576 single-color LEDs, and the external PMOS supports 288 groups of RGB, which can be used for RGB keyboards, RGB panels, and other applications.

CH555 has a built-in RGB driver unit that supports 128 sets of RGB tri-color LEDs or 384 single-color LEDs. It can be widely used in RGB lighting drivers, mechanical keyboards, and other applications.

Block Diagram

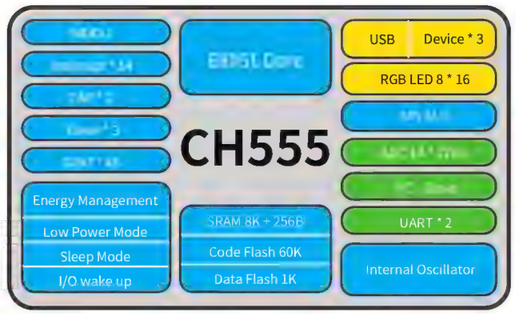

Features

- RISC-V4C core processor, up to 48MHz system frequency
- Support single-cycle multiplication and hardware division
- 20KB SRAM, 62KB Flash
- Multiple low-power modes: Sleep/Stop/Standby
- 8-channel general-purpose DMA controller
- Programmable Protocol I/O Controller PIOC
- Multi-set OPA/PGA/voltage comparator
- Multi-set analog voltage comparator CMP
- RGB tri-color LED pulse width modulation LEDPWM
- Multiple external 12-bit ADC conversion channels
- Multiple TouchKey channel detection
- Multiple timers, multiple USART
- 1 I²C interface and 1 SPI interface
- USB2.0 full-speed controller and PHY
- USB PD and Type-C controllers and PHYs
- 96-bit chip unique ID
- 2-wire serial debug interface SDI
- Package: QFN80, LQFP64, LQFP48, QSOP28

Model Selection Guide

Part NO.	Flash	RAM	GPIO	Adv Timer	GP Timer	RGB LED PWM	USART	USB2.0	USB PD Type-c	ADC	OPA	CMP	Touchkey	SPI	PIOC	Package
CH643W	62K	20K	69	2	1	48x18	4	H/D	✓	15+1	2	3	15	✓	✓	QFN80
CH643Q	62K	20K	60	2	1	48x10	4	H/D	✓	14+1	2	3	14	✓	✓	LQFP64
CH643L	62K	20K	44	2	1	24x18	4	D	-	10+1	2	3	10	✓	✓	LQFP48
CH643U	62K	20k	26	2	1	16x8	4	D	-	9+1	2	-	9	✓	✓	QSOP28

CH569
CH565

QingKe RISC-V core USB3.0 SuperSpeed and SerDes Interface MCUs

The CH569/565 microcontroller uses the QingKe V3A core and supports the IMAC subset of RISC-V instructions. USB3.0 SuperSpeed 5Gbps host and device controller (built-in PHY), Gigabit Ethernet controller, dedicated high-speed SerDes controller (built-in PHY, which can directly drive optical fiber), high-speed parallel interface HSPI, digital video port (DVP), SD/EMMC interface controller, encryption and decryption module are integrated on the chip. 128-bit wide DMA design ensures high-speed transmission of large amounts of data. It can be widely used in streaming media, real-time storage, ultra-high-speed USB 3.0FIFO, communication extension, security monitoring, and other application scenarios.

Block Diagram

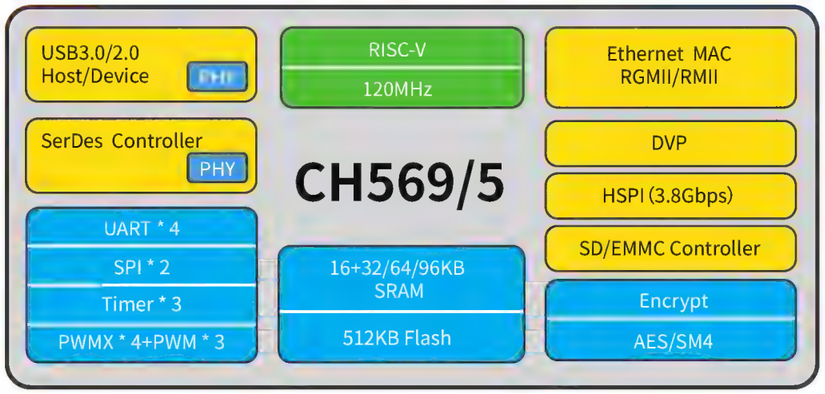

Features

- RISC-V core, 120MHz system frequency
- Support single-cycle multiplication and hardware division
- 448KB CodeFlash, 32KB DataFlash
- 16KB 32-bit wide SRAM
- 32/64/96 KB configurable 128-bit wide SRAM
- USB3.0 SuperSpeed 5Gbps, USB2.0 High-speed 480Mbps host and device controllers and transceivers (built-in PHY)
- Built-in Gigabit Ethernet controller
- Built-in SerDes control and transceiver, network cable transmission distance up to 90m
- Built-in digital video port (DVP)
- Built-in high-speed parallel interface HSPI, the fastest transmission speed of about 3.8Gbps
- Built-in EMMC controller
- Support AES/SM4 algorithm
- Active parallel port: 8-bit data, 15-bit address bus
- 4 sets of UART, 2 sets of SPI interface, 3 sets of 26-bit Timer
- Integrated 2-wire debugging interface, Support for online simulation

Model Selection Guide

Part NO.	Freq/Max	Flash	RAM	DataFlash	USB3.0	USB2.0	Ethernet	SerDes	HSPI	DVP	SDIO	Encrypt	UART	SPI	Timer	CAP	PWM	GPIO	VDD	Package
CH569W	96/120MHz	448K	48/80/112K	32K	OTG	H/D	1G MAC	1.25Gb	3.8Gb	-	1*UHS	AES/SM4	4	2	3*26b	3	7	49	3.3	QFN68
CH565W	96/120MHz	448K	48/80/112K	32K	OTG	H/D	1G MAC	1.25Gb	-	96MHz	1*UHS	AES/SM4	4	2	3*26b	3	7	49	3.3	QFN68
CH565M	96/120MHz	448K	48/80/112K	32K	OTG	H/D	-	1.25Gb	-	96MHz	-	AES/SM4	3	1	3*26b	3	5	22	3.3	QFN40

CH568 CH567

32-bit Dual High-Speed USB Transmission and Encrypted Interface MCU

Dual High-Speed USB/SATA/SD Controller

SM4/AES Encryption Algorithm

CH568 is a 32-bit RISC MCU with a system frequency of up to 120MHz. Integrated with USB2.0 high-speed 480Mbps interface, SATA controller, and SD controller, providing SM4 and AES encryption and decryption algorithms, supporting 8 encryption and decryption modes, widely used in information security transmission.

Block Diagram

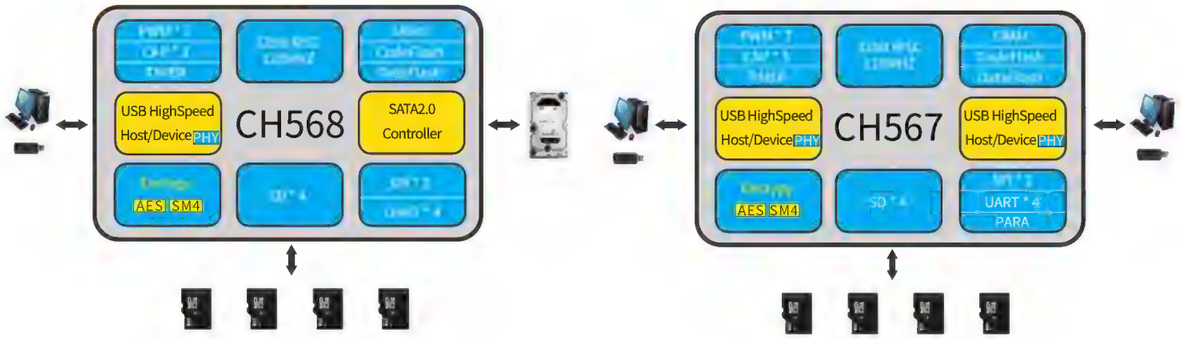

Features

- 32-bit RISC instruction set, 120MHz frequency
- SATA host/device controller
- Embedded SM4/AES encryption algorithm
- USB2.0 high-speed 480Mbps master-slave interface (built-in PHY) supports DMA
- 4 sets of high-speed SD card interfaces
- 192KB CodeFlash, 32KB RAM
- 4 sets of serial ports, 2 sets of SPI
- 32KB DataFlash holds non-volatile data
- 3 sets of 26-bit timers, 7-channel PWM

CH568valuation

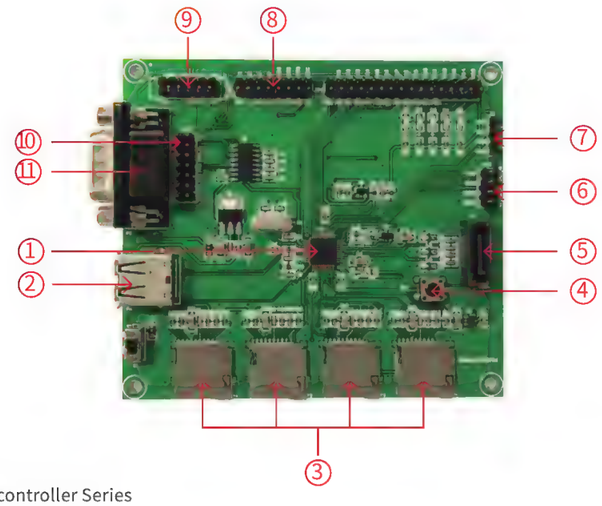

1. Main chip—CH568L
2. USB interface
3. TF card slot (SDIO*4 main interface)
4. Reset button
5. SATA interface (master/slave)
6. SPI0 interface
7. SPI1 interface
8. LED screen control interface
9. External power input interface
10. Serial port 0/1/2/3 selection
11. RS232 interface

CH645 CH545

QingKe RISC-V Core USB Multi Host/Device +Dual PD+Ethernet Multi-interface MCU

CH645 is based on the QingKe RISC-V core, with 8 sets of USB high-speed PHY and 2 built-in PD PHY. It provides 8 USB host ports/4 USB device ports and can support up to 28 USB devices through a USB combination device controller with 4 on-chip channels, including 7 ports HUB. The chip integrates PDUSB and Type-C fast charging functions, with a built-in Ethernet MAC controller and 100M physical layer transceiver PHY, providing rich peripheral resources such as SDIO, 5 I2C, dual serial ports, and dual SPI. Provide high integration and easy-to-use solutions for applications such as PD HUB, KVM, isolated and long-distance USB, Type-C docking stations, etc.

Block Diagram

Features

- RISC-V core, 125MHz main frequency
- Built-in factory-calibrated 20MHz RC oscillator
- Built-in 4-channel USB combination device controller with HUB, supporting 4-port KVM applications
- SerDes-based long-distance USB transceiver PHY, supporting USB signal isolation and long-distance transmission
- USB 2.0 high-speed controller and transceiver PHY, supporting up to 8 USB hosts and up to 4 USB devices
- 2 sets of USB PD and Type-C controllers and PHY
- Ethernet controller MAC and 10M/100M PHY
- SDIO host/slave interface, supporting EMMC/SD/SDIO cards
- 2-wire Serial debug interface SDI
- Packaging form: QFN68, QFN32

Model Selection Guide

Part NO.	Flash	RAM	USB	USB Isolated Remote Transmission	Ethernet	SDIO	Type-C	UART	SPI	I²C	I/O	Timer	VDD	Package
CH645W	224K	72-80K	8*H/28*D(480Mbps)	√	100M MAC+PHY	1	PD*2	2	2	5	40	2*16b	3.3V	QFN68
CH645F			5*H/4*D(480Mbps)						1	4	13			QFN32
CH545	64K	8K+256	4*H/17*D	-	-	-	-	2	2	5	58	3*16b	3.3V/5V	LQFP64

CH528
CH524

8-bit USB PD High-voltage Power Management MCU

Support USB PD, wireless, and other charging protocols

CH528 is an 8-bit RISC MCU with built-in high-voltage power management PM, supporting multiple levels of constant voltage or current limiting and direct optocoupler control with AC/DC power adapters. It supports power management for protocols such as USB PD and provides common functional modules such as ADC, 5 independent DACs, and PWM timing/counter.

Block Diagram

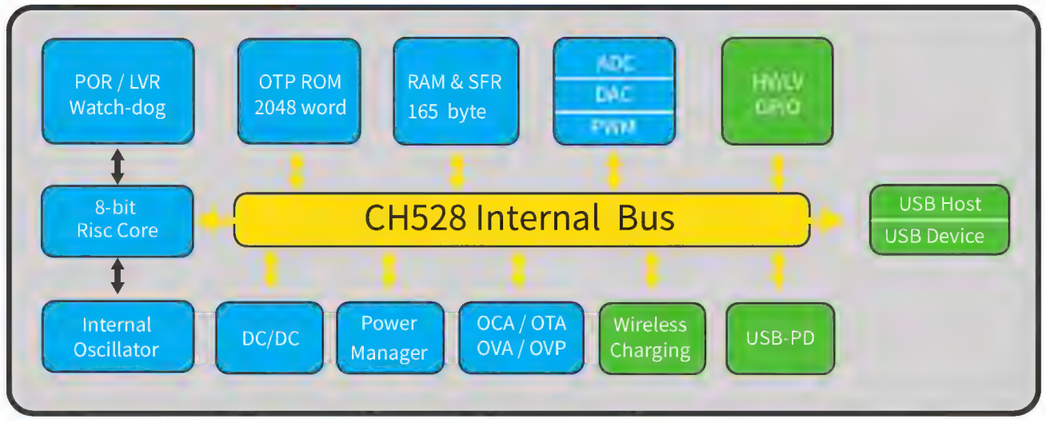

Features

- 8-bit RISC instruction set, 16MHz main frequency
- 128B RAM, 4KB ROM
- USB 2.0 Full Speed Host/Device
- Multiple fast charging protocols such as USB PD
- 5-channel 10-bit independent DAC, 8-channel 10-bit ADC
- Built-in DCDC control module
- Built-in wireless charging receiver module and power supply driver module
- Support AC/DC multi-level constant voltage or constant current high-voltage power management PM
- Support OCA, OTA, OVA alarms, and OVP power protection
- Built-in power-on reset, low voltage reset, and watchdog reset
- Provide 8 I/O pins, two of which support 20V high-voltage power supply
- High voltage process design, supporting power supply voltages from 5V to 22V
- Provide lead-free packaging such as QFN16, QFN20, SOP14, ESSOP10, etc

Applications

Type-C Cable　　Type-C Charger　　Car Charger　　Type-C Sink

QingKe RISC-V Core Low Power Bluetooth BLE 5.3 Wireless MCU

The DiLu CH583 is a 32-bit RISC-V MCU that integrates BLE wireless communication. On-chip integration of 2Mbps BLE communication module, 2 full-speed USB hosts and device controllers and transceivers, 2 SPIs, 4 serial ports, ADC, touch-key detection module, RTC, and other rich peripheral resources.

CH583
CH582
CH581

Block Diagram

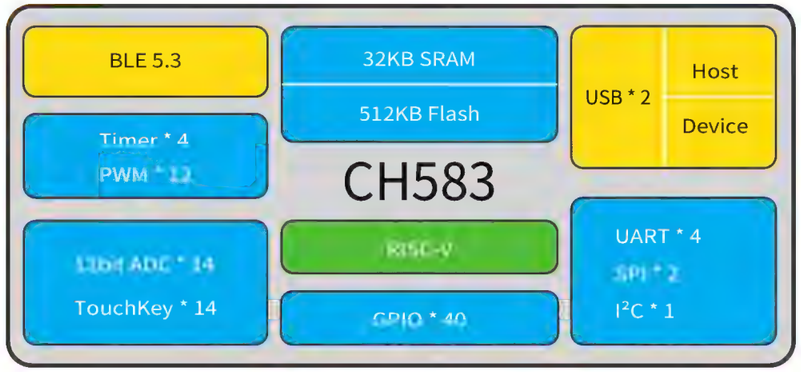

Features

- RISC-V core
- Support the RV32IMAC instruction set, supports hardware multiplication and division
- 32KB SRAM, 512KB Flash
- Support BLE 5.3 with a built-in 2.4GHz RF transceiver
- Provide protocol stack and application layer APIs
- Provide Mesh protocol stack interface
- Master-slave integration, supporting multiple masters and slaves
- Built-in temperature sensor
- 2 sets of USB 2.0 full-speed Host/Device
- 14 channel touch buttons
- 14 channel 12-bit ADC
- 4 sets of UART, 2 sets of SPI, 12 PWM channels, 1 I2C
- 40 GPIOs
- Minimum support for 1.7V power supply voltage
- Built-in AES-128 encryption and decryption unit, chip unique ID
- Packaging: QFN48, QFN28

Model Selection Guide

Part NO.	Core	Freq	Flash	SRAM	Data Flash	BLE	USB2.0 FS	ADC(12bit) Unit/Channel	TouchKey	Timer (26bit)	PWM	UART	SPI	I²C	RTC	WDOG	GPIO	VDD	Package
CH583M	RISC-V	20MHz	448K	32K	32K	5.3	2*H/D	1/14	14	4	12	4	2	1	✓	✓	40	1.7/3.3	QFN48
CH582M	RISC-V	20MHz	448K	32K	32K	5.3	2*H/D	1/14	14	4	12	4	1	1	✓	✓	40	2.3/3.3	QFN48
CH582F	RISC-V	20MHz	448K	32K	32K	5.3	2*H/D	1/8	8	4	10	4	1	1	✓	✓	20	2.3/3.3	QFN28
CH581F	RISC-V	20MHz	192K	32K	32K	5.3	D	1/6	-	4	10	2	1	-	✓	✓	20	2.3/3.3	QFN28

Others

CH573/1: 32-bit RISC-V core Bluetooth Low Energy BLE4.2 wireless MCU

CH592
CH591

Integrated LCD Driver for QingKe RISC-V Core

Bluetooth Low Energy BLE5.4 wireless MCU

CH592 is a RISC-V MCU MCU that integrates BLE wireless communication. Integrated on-chip with 2Mbps low-power Bluetooth BLE communication module, full-speed USB host and device controller and transceiver, segmented LCD driver module, SPI, 4 serial ports, 12 ADCs, touch-key detection module, and other rich peripheral resources.

Block Diagram

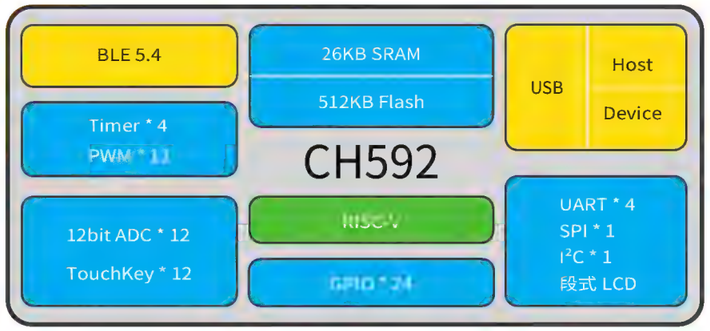

Features

- QingKe 32-bit RISC-V4C Core
- Support the RV32IMAC instruction set and self-expanding instructions
- Support single-cycle multiplication and hardware division
- 26KB SRAM, 512KB FLASH
- Support BLE5.4 with built-in 2.4GHz RF transceiver
- Provide optimized protocol stack and application layer APIs, supporting networking
- Master-slave integration, supporting multiple masters and slaves
- Built-in temperature sensor
- Segmented LCD, supporting 80-point (20 * 4) LCD panel
- USB 2.0 full-speed Host/Device
- 12 channel touch buttons
- 12 channel 12-bit ADC
- 4 sets of 26-bit timers
- 4 independent UARTs, 1 SPI, 12 PWM channels, 1 I^2C
- 24 GPIOs
- Minimum support for 1.7V power supply voltage
- Built-in AES-128 encryption and decryption, chip-unique ID
- Packaging: QFN32, QFN28, QFN20, TSSOP16

Model Selection Guide

PartNO.	Core	Freq	Flash	SRAM	Data Flash	BLE	USB2.0 FS	ADC/TS	TouchKey	Timer	PWM	UART	SPI	I²C	DC-DC	RTC	WDOG	GPIO	VDD	Package
CH592X	RISC-V	20MHz	448K	26K	32K	5.4	1*H/D	12/1	12	4	4+8	4	1	1	✓	✓	✓	24	1.7/3.3	QFN32
CH592F	RISC-V	20MHz	448K	26K	32K	5.4	1*H/D	8/1	8	4	4+6	4	1	1	✓	✓	✓	20	1.7/3.3	QFN28
CH592D	RISC-V	20MHz	448K	26K	32K	5.4	1*H/D	4/1	4	2	2+3	2	1	1	✓	✓	✓	12	1.7/3.3	QFN20
CH591F	RISC-V	20MHz	192K	26K	32K	5.4	1*D	6/1	-	4	4+6	2	1	-	✓	✓	✓	20	2.3/3.3	QFN28
CH591D	RISC-V	20MHz	192K	26K	32K	5.4	1*D	4/1	-	3	3+4	2	1	-	✓	✓	✓	12	2.3/3.3	QFN20
CH591R	RISC-V	20MHz	192K	26K	32K	5.4	1*D	4/1	-	4	4+3	2	1	-	-	✓	✓	10	2.3/3.3	TSSOP16

Others

CH579/8: On-chip integrated BLE communication module, Ethernet controller and transceiver, full-speed USB host and device controller and transceiver

CH9140
CH9141
CH9142
CH9143

BLE to Single/Dual Serial Port, 3-way Chip

Based on USB and BLE virtualization serial port technology, data exchange between Bluetooth, USB, and serial ports is achieved and compatible with conventional serial port applications.
CH9141: Bluetooth serial port transparent chip, supporting AT
CH9140: Bluetooth to serial port chip
CH9142: Bluetooth to dual serial port chip
CH9143: BLE/UART/USB 3-way chip

Block Diagram

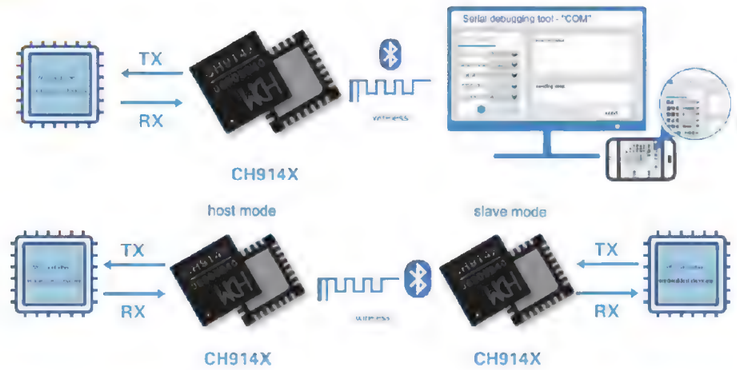

Features

Model	Package	Function Overview
CH9140	QFN28	Bluetooth to serial port chip. Based on BLE virtualization serial port technology, data exchange between Bluetooth and serial port is achieved and is compatible with conventional serial port applications. It does not require secondary development, making it easy to connect and use.
CH9141	QFN28	Bluetooth serial port transparent chip. Realize transparent transmission between Bluetooth and serial data. It supports the configuration of serial AT and Bluetooth transmission commands and MODEM communication signals and provides universal GPIO, synchronous GPIO, ADC acquisition, and other functions.
CH9142	QFN28	Bluetooth to dual serial port chip. Basic BLE virtualization serial port technology enables data exchange between Bluetooth and two serial ports, is compatible with conventional serial port applications, and does not require secondary development, making it easy to connect and use.
CH9143	QFN28	BLE/UART/USB three-way chip. Based on USB and BLE virtualization serial port technology, data exchange between Bluetooth, USB, and serial ports can be achieved without secondary development, making it easy to connect and use.

Applications

Smart Home
Sports Equipment
Sensing Detection
Car Bluetooth
Security Monitoring
Mobile Connection

BLE Module and Finished Products

BLE Module

Name	Description	Features	Image
BLE-SER-A-ANT	Bluetooth to Serial Port Module	Board-mounted PCB antenna Small volume Built-in 32M crystal	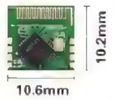
BLE-TPT-A-ANT	Bluetooth Serial Port Transmission Module	Board-mounted PCB antenna Small volume Built-in 32M crystal	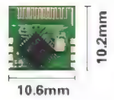
BLE-TPT-B-ANT		Onboard PCB antenna small volume Functional pins lead out	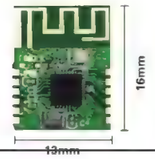
BLE2U-A-ANT	BLE/UART/USB Three-Way Module	Board-mounted PCB antenna Small volume Built-in 32M crystal	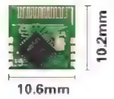
BLE2U-C-ANT		Board-mounted PCB antenna All functional pins are led out Built-in 32M and 32K crystals	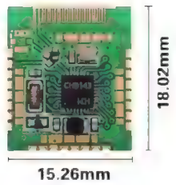

BLE Finished Product

Name	Explanation	Features	Physical Image
CH9160-DG-R0	High-speed USB Wireless receiver	It is a single-chip receiver integrated with a self-developed 2.4G and high-speed USB, compact, and plug-and-play. Paired with CH592, it can achieve a 2-8k high return rate wireless mouse.	
BLE232-NEP	Wireless RS232 Power free converter	It supports low-power Bluetooth and is compatible with conventional serial port applications and debugging tools without secondary development, achieving wireless serial port and serial port extension functions	
BLE-Dongle	Wireless serial port receiver	It supports low-power Bluetooth and is compatible with conventional serial port applications and debugging tools without secondary development, achieving PC USB to Bluetooth conversion.	

Fast access to the Internet, single chip, no programming required

Quickly realize Bluetooth device network access to the Internet, comply with Bluetooth Low Energy specifications, can be configured through the serial port, Bluetooth, or network port, and is easy to use.

Bluetooth Ethernet Gateway Module

Block Diagram

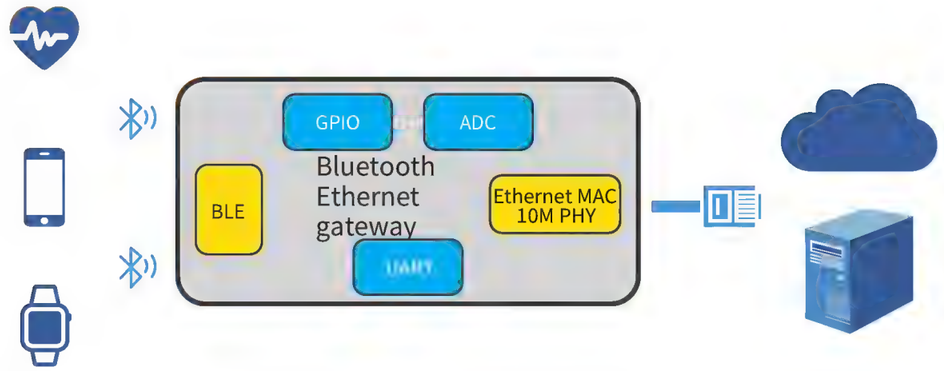

Features

- Single chip solution, no programming required
- Compliant with Bluetooth Low Energy specification
- 10M Ethernet port
- Support connected Bluetooth devices to access the Internet quickly
- Support Bluetooth and Ethernet configuration
- Support multiple GPIOs
- It supports one ADC acquisition and can be read via Bluetooth
- Support one UART, baud rate 300~921600bps
- Support IoT protocols such as MQTT and cloud platform connection

Applications

IoT Sensors	Smart Home	Industrial Production
Data Monitoring	Smart Agriculture	Bluetooth Network Access

BLE Mesh Wireless Networking

BLE Mesh Wireless Networking Solution

BLE Mesh is a networking specification launched by the Bluetooth Official Group (SIG). It uses BLE as a carrier to form a star-shaped mesh with many-to-many topologies. Each device in the network can communicate with other devices. Qinhengwei's BLE Mesh wireless networking solution fully supports various features of Bluetooth Mesh Profile, including forwarding, proxy, friends, and low-power consumption. It has passed the official certification of Bluetooth SIG and the Alibaba Tmall Genie ecological certification. It can be widely used in smart home appliances, smart lighting, smart buildings, smart robots, smart wearable devices, and other fields.

Block Diagram

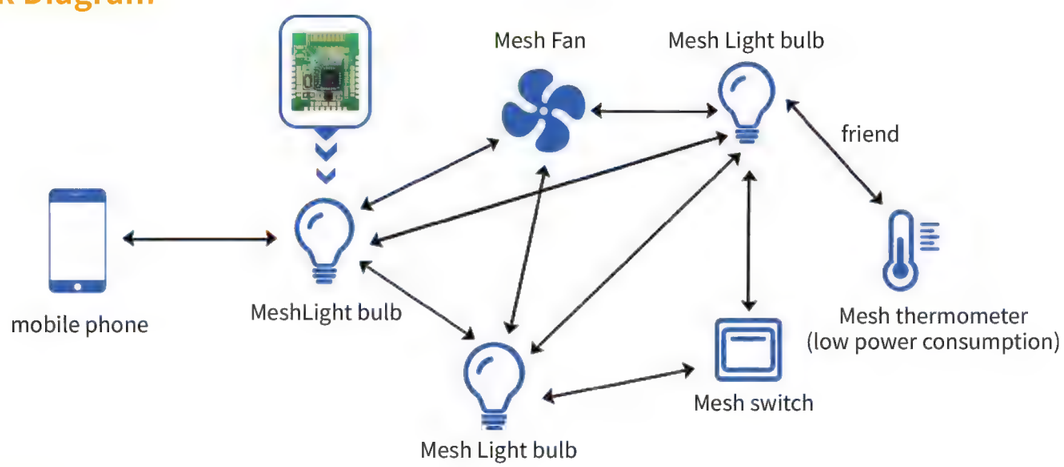

Features

- Self-discovery, self-connection, self-organizing network
- Second-level network configuration, millisecond-level control delay
- Provide a safe, reliable, and convenient BLE Mesh development kit
- Provide most models of Mesh Model
- We provide a BLEMOD module with CH57X as the main control to facilitate customer development and verification. This module has passed SRRC certification and Alibaba Alliance Ecological Certification

Development Hardware

BLEMOD module

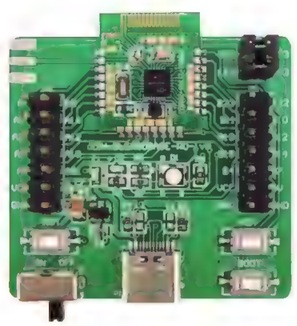

BLEMOD EVT Development board

CH182

10/100M Ethernet PHY Transceiver

Based on self-developed physical layer transceiver technology, the 182 series Ethernet PHY chips offer a variety of packages and customized pinouts, support MII/RMII interfaces, and have a compact peripheral. CH182D comes with a unique MAC address and is available in a QFN20 package of only 3*3mm.

Block Diagram

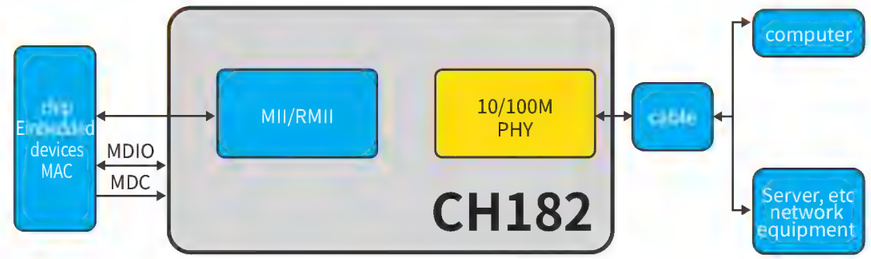

Features

- Compliant with 100Base-TX IEEE 802.3u standard
- Compliant with 10Base-T IEEE 802.3 standard
- Support two modes: MII and RMII
- Support full/half duplex operations
- Support automatic negotiation
- Support shutdown mode
- Support baseline drift (BLW) compensation
- Support Auto-MDIX
- Support interrupt function
- Support Wake on LAN (WOL)
- Support adaptive equalization
- Support automatic polarity correction
- Support two/three network status LEDs
- Support 25MHz external crystal or oscillator
- Provide a 50MHz clock source for MAC
- Optional support for external 50MHz clock Input

Model Selection Guide

Part NO.	Package	Size	Pin Spacing		Ambient Temperature
CH182F	QFN24	4.0*4.0mm	0.5mm	19.7mil	-40~85°C
CH182H	QFN32X5	5.0*5.0mm			-40~85°C
CH181H					-10~70°C

Applications

Industrial Control Motherboard

Transportation Services

Security Monitoring

CH390

10/100M Ethernet Controller Chip

CH390 is an industrial-grade Ethernet controller chip that integrates 10/100M Ethernet MAC and physical layer transceiver PHY. It supports 10BASE-T CAT3, 4, 5, and 100BASE-TX CAT5 and 6 connections, supports HP Auto-MDIX, has a low-power design, and complies with IEEE 802.3u specifications. CH390 has a built-in 16K byte SRAM, supporting 3.3V or 2.5V parallel interfaces and SPI serial interfaces, and is compatible with controllers and processors such as MCU, MPU, DSP, etc.

Block Diagram

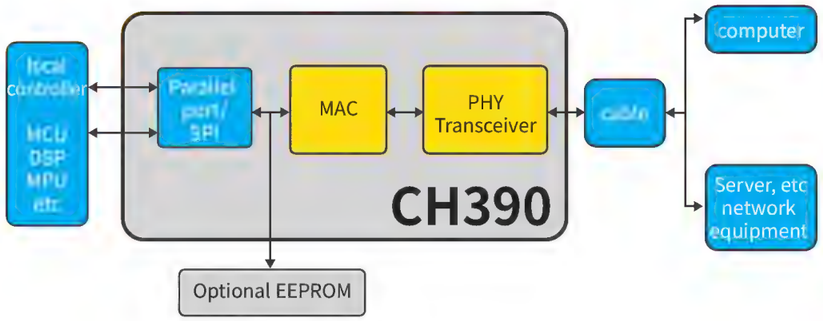

Features

- Self-developed 10/100M Ethernet MAC and physical layer transceiver PHY
- Built-in unique MAC address; no additional purchase or allocation required
- Support Auto-MDIX switching TX/RX, automatically identify positive and negative signal lines
- Support 10BASE-T and 100BASE-TX and auto-negotiation
- Support UTP CAT5E, CAT6 twisted pair, 120m transmission distance
- Support wake-up frames, link status changes, and magic packet events
- Support IEEE 802.3x flow control
- CH390L provides an 8-bit/16-bit parallel interface, and CH390H/D provides an SPI serial interface.
- Support generation and checking of TCP/UDP checksums for IPv4/IPv6
- CH390H/L supports an independent I/O interface power supply to adapt to main control chips with different voltages
- Built-in 50Ω impedance matching resistor and capacitor required for crystal oscillator, simplifying peripheral circuits
- Support optional external EEPROM configuration chip
- Available in small size QFN20, QFN32 and LQFP48 packages

Applications

IoT | Industrial Control Motherboard | Transportation Services | Security Monitoring

CH395 CH392

TCP/IP Network Protocol Stack Chip
Let MCUs be easily connected to the Internet

CH395 provides a 10/100M Ethernet interface and integrates a TCP/IP protocol stack, making it easy to achieve embedded system networking. It can be widely used in industrial control, smart grids, and other networking products.

Block Diagram

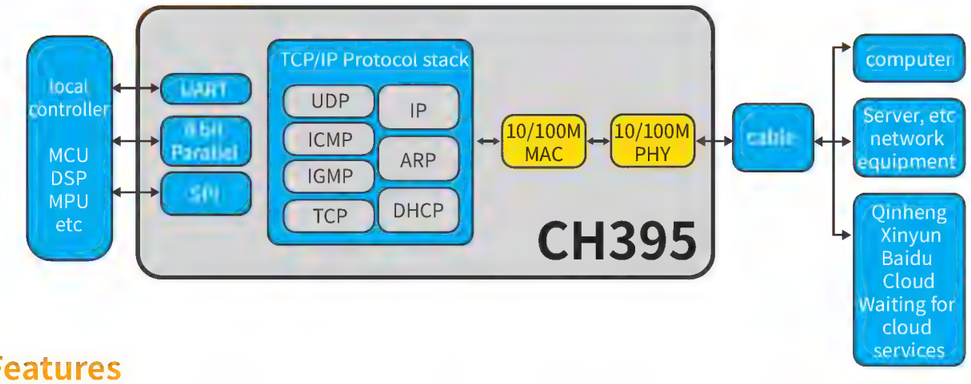

Features

- Built-in 10/100M Ethernet MAC and PHY, supporting full duplex/half duplex adaptive
- Support automatic conversion of MDI/MDIX lines and allow for arbitrary cross/direct network cable connection.
- Built-in TCP/IP network protocol stack, saving external MCU resources
- Network protocol command: The MCU only needs simple commands to achieve network communication
- Provide 8 independent socket pairs for simultaneous data transmission and reception
- Built-in 24KB RAM for communication between various connections and built-in 4KB EEPROM
- Support 8-way GPIO expansion
- MCU interface diversification: SPI, asynchronous serial port, 8-bit passive parallel port
- Provide evaluation boards and commonly used MCU application routines to shorten development time.
- Can provide TCP/IP protocol stack customization services
- Support IoT protocols such as MQTT and cloud platform connectivity
- Provide QFN28, LQFP64M, and LQFP128 packaging

Others

CH392: Built-in 10M Ethernet MAC and PHY, built-in TCP/IP protocol stack, network protocol command, support for SPI, UART, and MCU connection.
Small size, low power consumption, high integration, providing TSSOP20 and QFN28 packaging.

Applications

IoT | Public Service Terminal | Medical Devices
Office Automation | Urban Traffic Management | Server Management

CH9121
CH9120
CH9126

Network Serial Port Transparent Chip

Realize fast networking of serial devices

CH9121 integrates a TCP/IP protocol stack, easily realizing two-way and transparent data transmission between the network and serial port. With the help of the CH9121 chip, customers can quickly implement serial device networking, greatly reducing the difficulty of serial device networking and shortening the product development cycle.

Bilateral transparent transmission of the serial port and network data

No need to modify the original serial device communication protocol. It can quickly achieve the networking function of serial devices.

Serial Port to Ethernet Module

Block Diagram

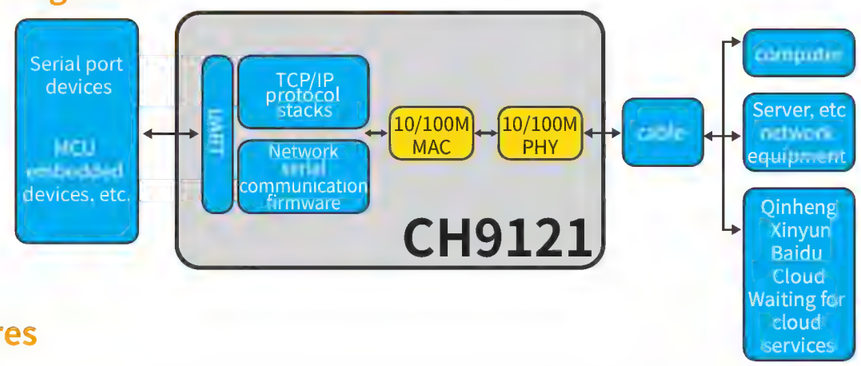

Features

- Built-in Ethernet Media Transport Layer (MAC) and Physical Layer (PHY), single-chip solution
- Support 10/100M, full-duplex/half-duplex adaptive
- Support automatic switching of MDI/MDIX lines
- Support TCP CLIENT, TCP SERVER, and UDP modes
- Support up to two independent serial ports simultaneously, with independent, transparent transmission.
- Support DNS domain name access
- Support DHCP to obtain IP addresses automatically
- Support TCP underlying KEEPALIVE heartbeat mechanism
- The serial baud rate can support up to 921600bps
- It supports full-duplex and half-duplex serial communication and automatic RS485 transmission and reception switching.
- Set chip parameters through serial commands and network apps
- Support virtual serial port working mode

Others

CH9120: It is a serial-to-ethernet chip with a built-in 10M Ethernet MAC and PHY, a bidirectional transparent transmission, small size, low power consumption, a supporting serial port, and an upper computer tool configuration.
CH9126: Network timing chip based on SNTP protocol. It supports the SNTP server and SNTP client modes and can configure chip parameters through network and serial ports.

There is also an independent data transmission channel inside the chip, which can achieve Ethernet and serial port data transmission.

Applications

Smart Home
Power Instruments
Industrial Automation
One Card System
Public Service Terminal
Traffic Management

Block Diagram

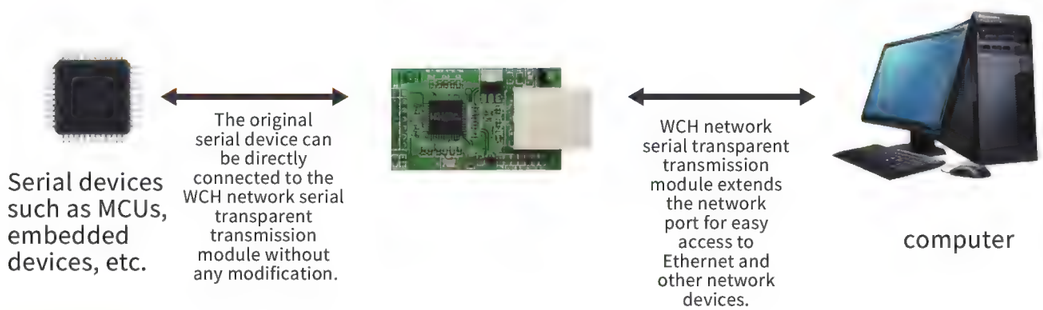

Features

- Two-way transparent transmission of serial port and network data
- 10/100M adaptive network interface, compatible with 802.3 protocol
- The serial port supports TTL/RS232/RS485 mode
- Support KEEPALIVE mechanism
- Support 4 working modes: TCP CLIENT/SERVER and UDP CLIENT/SERVER
- Serial port baud rate supports 300~921600bps
- Support DHCP/DNS functionality
- Support automatic switching of MDI/MDIX lines
- Support serial AT commands, network APP, or WEB configuration

Model Selection Guide

Model	Function
NET-SER-DT TTL	TTL serial port to Ethernet (10/100M)
NET-SER-DT RS232	RS232 serial port to Ethernet (10/100M)
NET-SER-DT RS485	RS485 serial port to Ethernet (10/100M)
NET-TTL-9120	TTL serial port to Ethernet (10M)
NET-232-9120	RS232 serial port to Ethernet (10M)
NET-485-9120	RS485 serial port to Ethernet (10M)

CH397

USB 2.0 100Mbps Network Card Chip

CH397 is a USB to Ethernet chip that complies with the USB2.0 protocol specification. It integrates USB2.0 PHY and Ethernet MAC+PHY that complies with the IEEE802.3 protocol specification and supports 10M/100M networks. Featuring high integration, low power consumption, and ease of use.

Block Diagram

Features

- Single-chip USB2.0/2.1 to 10/100M Fast Ethernet, integrated USB PHY and Ethernet MAC and PHY
- Support CDC-ECM, CDC-NCM, and RNDIS protocols. No need to install a driver or optional manufacturer driver
- Support 10Mbps and 100Mbps rates, compatible with IEEE 802.3 10BASE-T/100BASE-TX
- Support 10M/100M auto-negotiation
- Built-in TX/RX packet buffer
- Support IEEE 802.3x flow control and half-duplex conflict pressure fallback flow control.
- Support IEEE 802.3Q VLAN tagging
- Support sleep mode and low-power sleep mode
- Industrial temperature range: -40~85℃
- Provide QFN24, QFN32, QSOP16 and other small-volume, low-cost, easy-to-process packaging forms

Applications

Computer/Mobile Peripheral Products IoT Security Monitoring Network Server

CH334 CH335

4-Port Crystal Free USB HUB Controller Chip

CH334 and CH335 comply with USB 2.0 protocol specifications. The upstream port supports USB2.0 high-speed and full-speed, and the downstream port supports USB2.0 high-speed, full-speed, and low-speed. The chip supports high-performance MTT mode, which performs significantly better than ordinary HUB chips that use time-sharing STT mode. Industrial-grade design, streamlined peripherals, some models support upstream port switching, no crystal oscillator required in some cases, only two external capacitors required.

Block Diagram

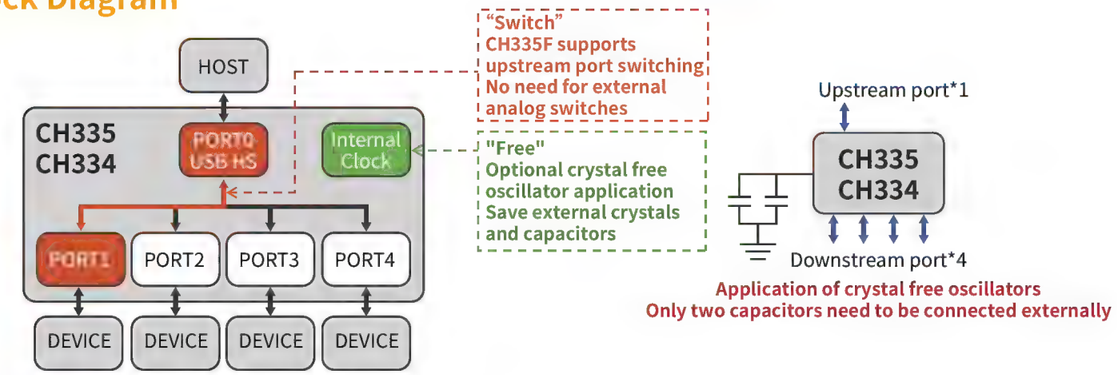

Features

- 4-port USB hub, providing 4 USB2.0 high-speed downstream ports, backward compatible with low/full-speed
- Support high-performance MTT mode, providing independent TT for each port to achieve full bandwidth concurrent transmission. The total bandwidth is 4 times that of STT
- Self-developed dedicated USB PHY, low-power consumption technology, significantly reduces power consumption compared to the first-generation HUB chip
- 6KV enhanced ESD performance, Class 3A
- Industrial temperature range: -40~85℃
- Provide QFN28, QFN24, QFN16, QFN12, QSOP16, QSOP28 and other small-volume, low-cost, easy-to-process packaging forms

Model Selection Guide

Part NO.	TT Mode	Overcurrent Detection	Power Control	LED Indicator Light	I/O pin Configuration Power Mode	External EEPROM Provides Configuration Information	Customized Configuration Information	Upstream Port Switching Function	Crystal-Free Applications	Package
CH335J	MTT	-	-	-	-	-	√	-	√	QFN12
CH334P		-	-	1	-	-		-	Optional	QFN16
CH334R		-	-	-	-	-		-	Optional	QSOP16
CH334U/F		GANG	GANG	5	√	√		-	Optional	QSOP28/QFN24
CH334S/Q		GANG	GANG	1	√	√		-	Optional	SSOP28/QFN36X6
CH334H/L		Independent/GANG	GANG	1	√	√		-	Optional	QFN28X5/LQFP48
CH335F		Independent/GANG	Independent/GANG	5/9	√	√		√	Optional	QFN28

Applications

Personal/Industrial Mother MotherBoards Personal/Industrial Peripherals Embedded Systems

CH338

7-Port Industrial Grade USB HUB Controller Chip

CH338 complies with the USB2.0 protocol specification and supports high-performance MTT mode, with some applications requiring no crystal oscillator. Some models support upstream port switching, integrate USB PD function, and support Type-C power transmission. Industrial-grade design with simplified peripherals, suitable for application scenarios such as computer and industrial computer motherboards, peripherals, embedded systems, etc.

Block Diagram

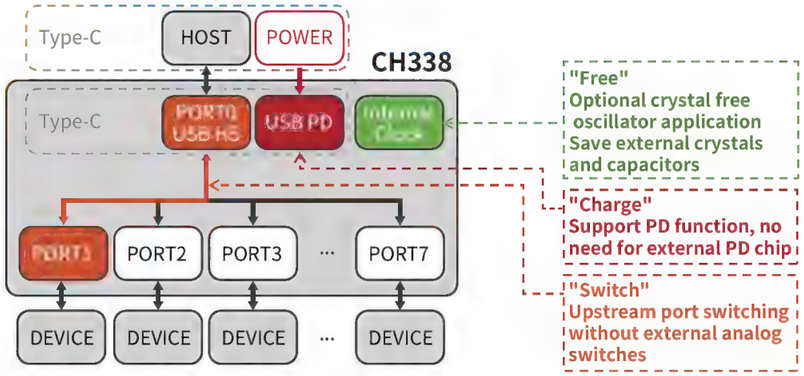

Features

- 7-port USB hub, the upstream port supports USB2.0 high-speed 480Mbps and full-speed 12Mbps, and the downstream port supports USB2.0 high-speed, full-speed and low-speed
- Some applications can support crystal-free mode, saving external crystals and capacitors.
- Self-developed dedicated USB PHY, low-power consumption technology, supports self-power supply or bus power supply
- 6KV enhanced ESD performance, Class 3A
- Industrial grade temperature range: -40～85°C
- Provide QFN64X9, LQFP48, QFN32 and other small-volume, low-cost, easy-to-process packaging forms

Model Selection Guide

Part NO.	TT Model	Overcurrent Detection	Power Control	LED Indicator Light	I/O Pin Confi-guration Power Supply Mode	I/O Pin Confi-guration Non-Removable Device	External/ Internal EEPROMSMBus Interface Configuration Information	Custom Confi-guration Information	Upstream Port Switching Function	Type-C PD	Chip power supply	Package
CH338X	MTT	Independent/ GANG	Independent/ GANG	7+4	√	√	√	√	-	-	Single 3.3V	QFN64X9
CH338L		GANG	GANG	15	-	√			-	-	Single 3.3V/ Single5V	LQFP48
CH338F		GANG	GANG	-	-	-			√	√	Single3.3V	QFN32

Applications

Personal/Industrial Motherboards Personal/Industrial Peripherals Embedded Systems

CH339

7-Port Integrated Ethernet, Card Reader, USB PD

CH339 complies with the USB2.0 protocol specification and integrates functions such as 7-port USB HUB, 100Mbps Ethernet, high-speed SD card reader, USB PD, and USB to JTAG/UART/SPI/I2C interface on a single chip. The chip supports high-performance MTT mode, industrial-grade design, and peripheral simplification. Some models support upstream port switching, and crystal oscillators are not required in non-Ethernet scenarios.

Block Diagram

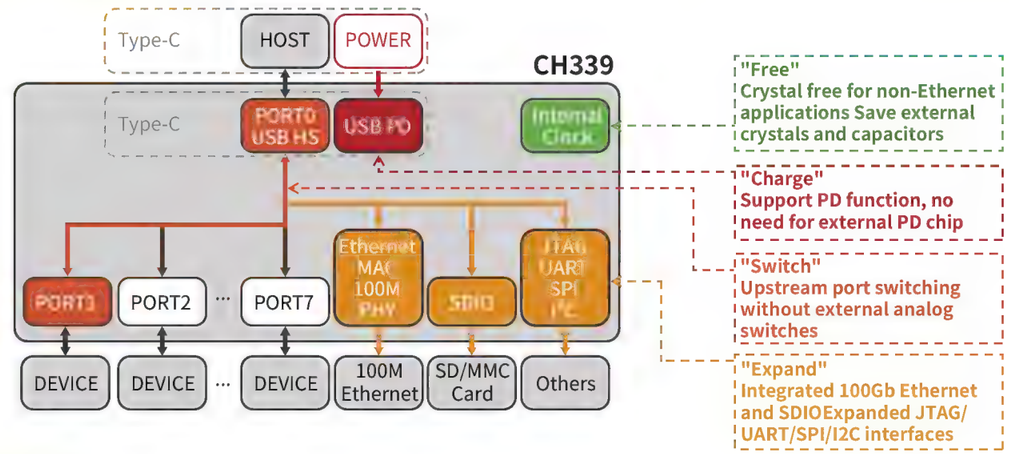

Features

- 7-port USB hub, the upstream port supports USB2.0 high-speed 480Mbps and full-speed 12Mbps, and the downstream port supports USB2.0 high-speed, full-speed and low-speed
- Non-Ethernet applications can support crystal-free mode, saving external crystals and capacitors
- Self-developed dedicated USB PHY, low-power consumption technology, supports self-power supply or bus power supply
- Self-developed 10M/100M Ethernet MAC+PHY, compatible with IEEE 802.3 10BASE-T/100BASE-TX
- 10M/100M automatic negotiation, supports UTP CAT5E, CAT6 twisted pair, supports Auto-MDIX, automatically identifies positive and negative signal lines
- Support remote wake-up through events such as magic packets and network wake-up packets
- Support IPv4/IPv6 packet verification, supports IPv4 TCP/UDP/HEAD and IPv6 TCP/UDP packet verification generation and inspection
- Support SD cards and MMC cards, which can be converted into standard USB mass storage devices
- The SDIO interface is compatible with SD card specification 2.0 and MMC specification 4.5
- Provide USB to JTAG/UART/SPI/I2C and other interface functions
- 6KV enhanced ESD performance, Class 3A
- Industrial grade temperature range: -40～85°C
- Provide QFN68, QFN32 and other small-volume, low-cost, easy-to-process packaging forms

Applications

Personal/Industrial Motherboards Personal/Industrial Peripherals Embedded Systems
USB HUB Expansion Dock

CH323

4-port USB3.2 Gen1 Super Speed HUB Controller chip

CH323 is compatible with the USB 3.2 Gen1 specification and has a data transmission bandwidth of up to 5Gbps. The chip uses self-developed ultra-high-speed USB PHY, with two built-in USB PDs that support Type-C interface and upstream port switching. Simultaneously integrating USB2.0 HUB, supporting USB virtual devices, and supporting ultra high-speed 5Gbps, high-speed 480Mbps, full speed, and low-speed downstream ports. The product has high integration and streamlined peripherals, making it suitable for hub and dock-related applications in multiple scenarios, such as computers, industrial control computers, and embedded systems.

Block Diagram

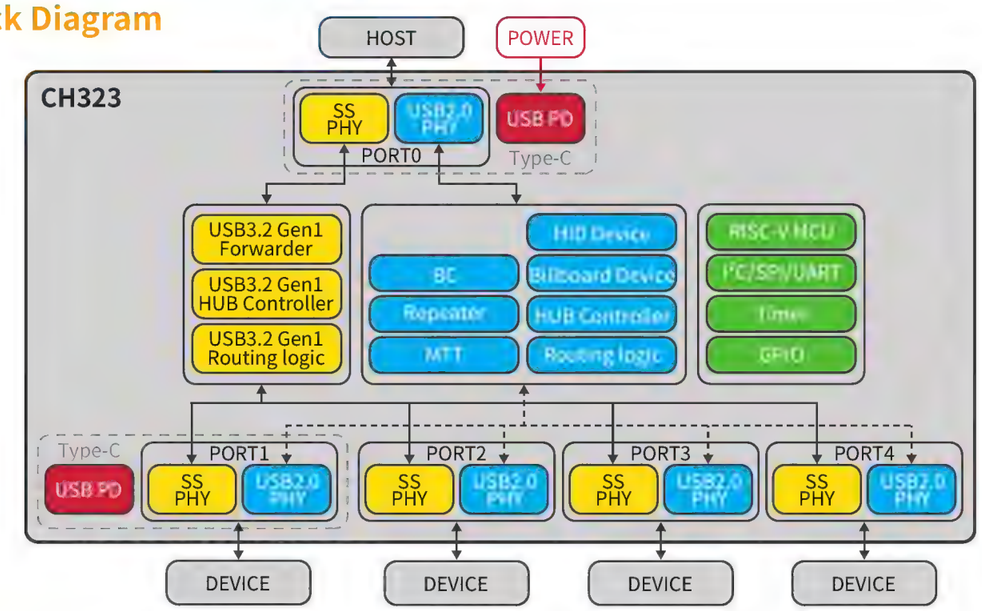

Features

- One upstream port, supporting Super Speed 5Gbps, high-speed 480Mbps, and full-speed 12Mbps
- Four downstream ports, supporting ultra high-speed 5Gbps, high speed 480Mbps, full-speed 12Mbps, and low-speed 1.5Mbps
- Built-in upstream exchange mechanism, saving external analog switches, no discount on signal quality, and smaller product size
- Built-in two sets of PD controllers and transceivers support Type-C without needing external PD chips.
- Self-developed ultra high-speed PHY based on SerDes technology, power optimization
- Integrated with USB2.0 HUB, supporting high-performance MTT mode
- Support two USB virtual devices (USB-HID, USB-Billboard, etc.)
- Support operating systems such as Windows, macOS, Linux, etc
- Support mobile devices such as laptops, tablets, and smartphones
- Independent/overall power control, independent/overall overcurrent detection
- Parameters or functions can be configured through GPIO, internal EEPROM, external FLASH, etc
- High integration, peripheral simplification, small PCB area, and low BOM cost

Applications

Personal/Industrial Motherboards Personal/Industrial Peripherals
Embedded Systems USB Hub Expansion Dock

CH347

USB2.0 High-Speed USB to JTAG/SPI/I²C/UART/GPIO chip

CH347 is a high-speed USB bus adapter chip that provides an asynchronous serial port and I2C synchronous serial interface, SPI synchronous serial interface, JTAG interface, etc, through the USB bus.

Block Diagram

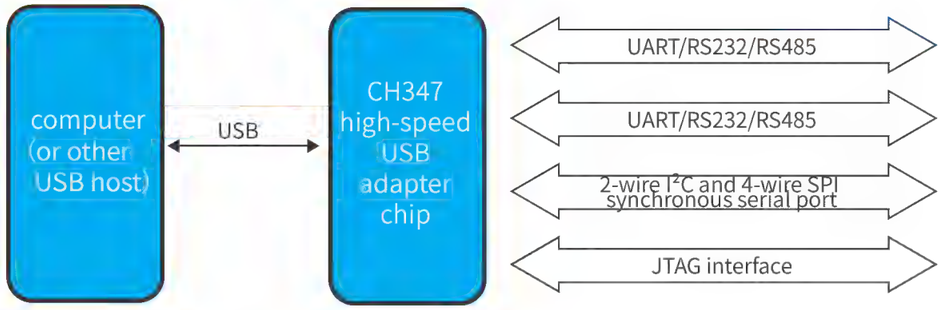

Features

- 480Mbps high-speed USB device interface, peripheral components only require crystal oscillators and capacitors
- Support JTAG host interface, support custom protocol fast mode and bit bang mode, with a transmission frequency of up to 30Mbit/s
- Support SPI mode 0/1/2/3, support transmission frequency configuration, and can transmit frequencies up to 60MHz
- Provide I2C host interface, supporting speeds of 20K/100K/400K/750KHz
- Hardware full-duplex serial port, built-in independent transmit and receive buffer, communication baud rate support 1200bps to 9Mbps
- Support half-duplex, provides status indication TNOW for serial port transmitting, and can be used to control RS485 transceiver switching
- Support up to 8 GPIO input/output functions
- Built-in EEPROM can configure parameters such as working mode, chip VID, PID, maximum current value, manufacturer and product information string, etc

Applications

FPGA/CPU/MCU Debugging Download Industrial Control Programming Downloader

CH348 CH347 CH344 CH343 CH342 CH341 CH340

USB to Serial Port Chip

The USB high-speed/full-speed serial port series chip can convert USB to 1/2/4/8 serial ports, support independent power supply for serial port I/O, support VCP/HID/CDC to serial port, VCP serial port supports hardware flow control and high baud rate continuous communication, some models support content configuration such as VID/PID/String, and support operating systems such as Windows/Linux/Android/macOS.

Block Diagram

Features

- Single-chip implementation of USB conversion to 1/2/4/8 serial ports
- Supporting independent power supply for serial I/O, achieving serial communication such as 5V/3.3V/2.5V/1.8V
- Support high baud rate and hardware flow control and supports adaptive serial baud rate
- Support multiple driver types, can use vendor VCP serial port drivers or CDC/HID class drivers
- Highly integrated internally, with built-in clock/USB terminal resistor/power-on reset and streamlined peripherals
- Built-in Unique ID (USB Serial Number)
- Built-in/external EEPROM, supporting configuration of VID/PID/String and other content
- Support USB/BLE to virtual serial port conversion, achieving BLE/serial port/USB three-way transparent transmission
- It supports a one-click download function for a serial port without peripheral circuits

RoadMap

The latest third-generation product serial port adopts a DMA transceiver, which can achieve continuous and stable communication at a baud rate of 6Mbps. Highly integrated internally, crystal oscillator/USB terminal resistor/EEPROM is fully built-in; dual power supply design supports independent power supply for serial port IO and can support 5V/3.3V/2.5V/1.8V and other serial port communications; provides a variety of packages, as small as 3*3mm; supports VID/PID/String and other content configurations; Built-in Unique ID, which can realize system serial port number fixation and product encryption.

Version	Classic Version	2nd Generation	3rd Generation
Model	CH340C/E/N/K/G/T CH341A/T	CH340B CH341F/B CH9340C/K	CH343P/G/K CH9102F/X CH9101U/H/Y/R/N
Maximum Serial Port Baud Rate	2Mbps	2Mbps	6Mbps
Hardware Flow Control	CH341A/T only	CH341F/B only	√
USB Parameter Configuration	CH341A/T requires external EEPROM	CH341F/B requires external EEPROM CH340 built-in EEPROM	CH343P/CH9102F/CH9101U/H/Y/R Built-in EEPROM
Serial Port 10 Voltage Support	5V/3.3V	5V/3.3V	5V/3.3V/2.5V/1.8V
Dual Power Supply (IO anti-backflow)	× (CH340K Supports IO anti-backflow)	×	√
Modem Signal	√	√	√
Built-in Clock	CH340C/E/N/K built-in	√(CH341F/B also supports external)	√
Temperature range	Built-in Clock: -20~70°C External Crystal Oscillator: -40~85°C	Built-in Clock: -20~70°C External Crystal Oscillator: -40~85°C	All series are industrial grade, -40~85°C
Package	MSOP/ESSOP/SOP	QFN/ESSOP/SOP	QFN/ESSOP/SSOP/QSOP/SOP
Built-in Unique ID	×	×	√

Model Selection Guide

CH343: USB to One Channel Enhanced Asynchronous Serial Port, with a baud rate of up to 6Mbps, supporting efficient and continuous transmission of high baud rate big data and supporting serial hardware flow control,
The serial I/O voltage supports 5V/3.3V/2.5V/1.8V, with a built-in clock and a QFN small package.

CH340/CH341: Classic model of USB to single serial port chip, available in a crystal-free version with multiple packaging options,
The CH340K is equipped with three diodes to reduce current backflow between the I/O pins of the MCU during an independent power supply.

CH347: 480Mbps USB high-speed to two enhanced asynchronous serial ports, with a baud rate of up to 9Mbps, supporting efficient and continuous transmission of high wave ultra-large data,
Supports serial hardware flow control and can simultaneously connect to JTAG/SPI/I ^{2} Hardware interfaces such as C/GPIO, built-in EEPROM, and support for USB parameter configuration.

CH342: USB to two enhanced asynchronous serial ports, with a baud rate of up to 3Mbps, supporting efficient and continuous transmission of high baud rate big data and supporting serial hardware flow control,
The serial I/O voltage supports 5V/3.3V/2.5V/1.8V, with a built-in clock and a QFN small package.

CH344: 480Mbps USB high-speed/full speed to 4 asynchronous serial ports, baud rate supports up to 6Mbps, providing 4 RS485 directional control pins,
16 GPIO signals.

CH348: 480Mbps USB high-speed to eight channel enhanced asynchronous serial port, with a baud rate of up to 6Mbps, and serial I/O voltage support of 3.3V/2.5V/1.8V,
Provide 8 RS485 directional control pins and 48 GPIO signals.

CH9329/CH9326: Implementing USB to single serial port based on USB HID, supporting bidirectional transmission.

CH341
CH345

USB to I²C/SPI/MIDI/ Print Port/Parallel Port Chip

CH341/CH345 is a USB bus adapter chip that can realize USB to I2C, SPI, MIDI, printing port, parallel port, GPIO, and other functions.

Block Diagram

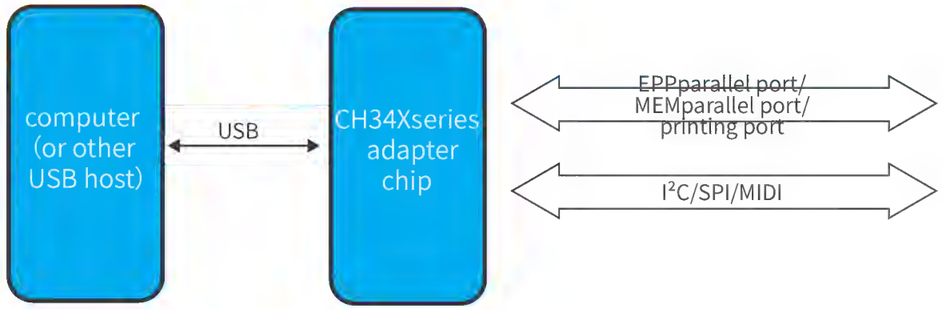

Features

- Full-speed device interface, compatible with USB2.0
- Built-in crystal oscillator version available
- I²C speed supports 20K/100K/250K/750kHz
- Parallel port supports EPP and MEM modes
- MIDI supports one input and two outputs
- Customizable manufacturer VID, PID, and serial number
- Support 5V and 3.3V voltage
- Support Windows/Linux/macOS/Android
- Provide a variety of packages, such as QFN/SSOP/SOP, etc.

Others

CH9343: Highly integrated, low-power consumption, single-chip full-speed USB Android Host interface control chip, configurable to 6 expansion interfaces: UART,GPIO, PWM, I2C master, SPI master, and SPI slave for Android devices with built-in USB device interface to access external components.

Applications

Computer Peripheral Products
Office Printer
Instrumentation
MIDI Devices
Handheld Devices

CH9329
CH9328

Serial Port to HID chip

CH9329 is a serial port to a standard USB HID device (keyboard, mouse, custom HID) chip, with bidirectional transmission and support for multiple working modes. It can be recognized as a combination of different types of devices on the computer, supporting various serial communication modes and flexible switching.
CH9328 is a chip that converts the serial port to an HID keyboard interface with a one-way transmission. It receives data sent by serial port and packages it into standard report values according to HID keyboard specifications to upload to the computer.

Block Diagram

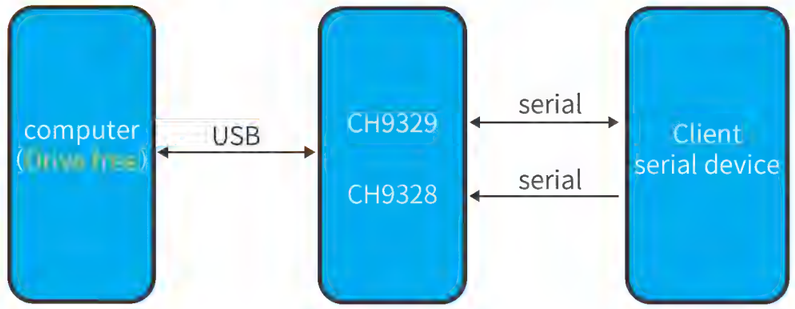

Features

- Full-speed device interface, compatible with USB2.0, compliant with HID device specifications
- The default serial baud rate is 9600bps, supporting multiple serial communication formats and various common baud rate settings.
- Customizable vendor VID, PID, and various string descriptors for chips
- It supports both regular and multimedia keyboard functions and supports full keyboard functionality
- Support relative and absolute mouse functions
- Support custom HID device functionality, achieving bidirectional data transmission through USB and serial ports.
- Support Windows/Linux/macOS/Android and other systems with driver-free installation.
- A built-in crystal oscillator supporting 5V and 3.3V power supply voltages
- Adopting a small volume SOP16 package, compatible with RoHS

Applications

One Card System
Financial Equipment
Industrial Control
Office Automation
Medical Equipment

CH317

USB 2.0 Extender Control Chip

CH317 is a USB 2.0 extender control chip that achieves USB signal extension of over 100 meters through inexpensive Ethernet or fiber optic cables with outstanding anti-interference capabilities. It supports low-speed, full-speed, and high-speed USB transmission without any driver, supports device hot swapping, and supports HUB expansion.

Block Diagram

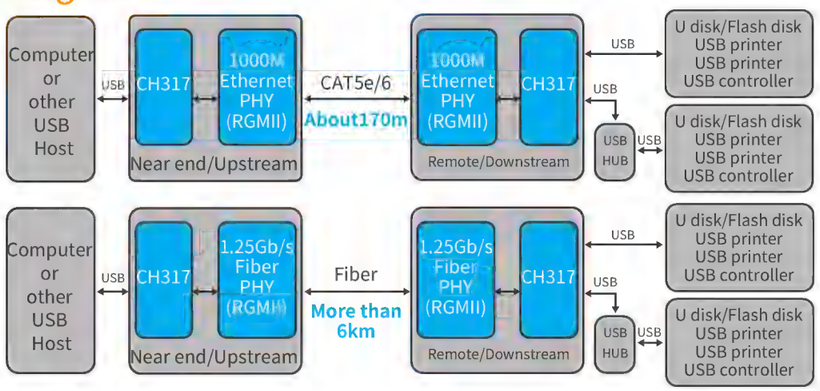

Features

- USB extension distance is long, supporting USB 2.0 signal fiber extension, with a distance of over 6 kilometers; Support network cable extension,
- Generally, Category 5 cables are about 100 meters long, while Category 6 cables are 170 meters long.
- It supports various USB peripherals, such as USB printers, scanners, cameras, USB drives, keyboards, mice, etc., and HUB expansion.
- No additional software installation is required, and it is compatible with all operating systems.
- Support USB device hot swapping, plug-and-play
- It can be used for transformer isolation or optical isolation of USB2.0 high-speed signals
- Support switch penetration, which can extend the distance by adding network cables through the switch or achieve signal integration with other networks for transmission
- Support 2 sets of I/O synchronous extension control, enabling remote computer on/off or customized I/O signal remote input/output control
- Provide a 12M clock output that can be used for clock input in HUB chips
- Chip automatic recognition configuration USB host and device mode
  3.3V single power external input, supporting 2.5V RGMII interface voltage

Others

CH9350: USB keyboard and mouse to serial port communication control chip must be used in pairs. Combined with the simple and easy-to-use features of the asynchronous serial port, the USB keyboard and mouse can be The USB communication method with the USB host is expanded to the asynchronous serial port (UART) method.

CH9374B: A USB KVM with built-in 4 upstream USB device ports, 4 downstream USB host ports, 1 PS2 host port, and switching control signals

Applications

Industrial Control
Audiovisual Multimedia
Computer Peripherals
Security Monitoring
Medical Equipment

CH318

USB 2.0 Isolation Extender Control Chip

CH318 can achieve isolation, real-time transfer, and distance extension of USB signals through capacitive or network transformer coupling. When the chip is in host computer mode, it is recognized as a standard USB HUB. In addition to the isolation extension interface connected to the slave computer, it also provides one USB2.0 downstream port; when the chip is in slave computer mode, it gives two USB2.0 downstream ports.

Block Diagram

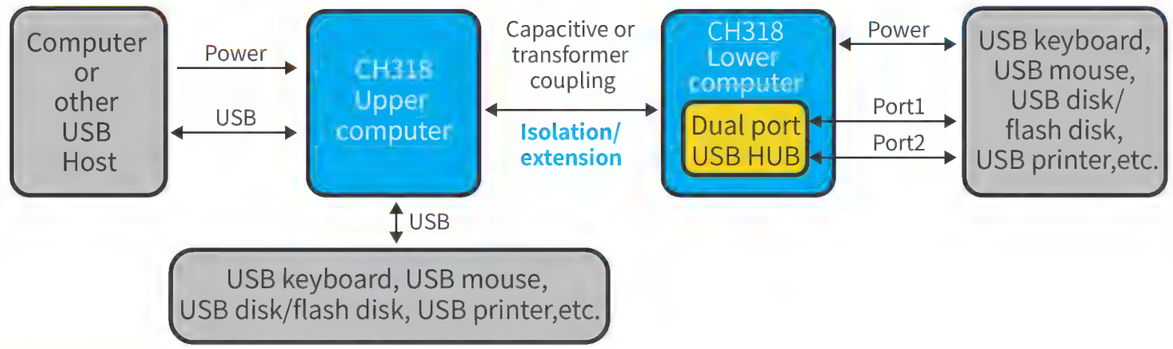

Features

- Host computer mode provides 1 USB2.0 downstream port, and slave computer mode provides 2 USB2.0 downstream ports, compatible with USB1.1 protocol specification.
- Support 480Mbps high speed, 12Mbps full speed, and 1.5Mbps low speed USB transmission
- Support USB control transmission, batch transmission, interrupt transmission, synchronous/isochronous transmission
- Support connection status indication
- Built-in capacitive coupling drive circuit and network transformer coupling drive circuit
- Pure hardware solution, completely real-time and transparent to USB protocol. No need to install any additional drivers
- Provides crystal oscillator, supports external clock input, built-in PLL provides 480MHz Clock for USB PHY
- The upstream port has a built-in 1.5KΩ pull-up resistor, and the downstream port has a built-in pull-down resistor required by the USB Host, simplifying the peripherals.
- 6kV enhanced ESD performance, Class 3A
- Industrial grade temperature range: -40～85°C
- Provide TSSOP20 package form
- If you need to expand the number of USB ports, the slave computer can be replaced with the CH338F, which also has an extension function.
- If you need to expand more USB ports and SPI, JTAG, UART, I^2C, and other interface functions, the slave computer can be replaced with CH339W.

Others

CH315: USB full (low) speed signal isolation and extension control chip, supporting capacitor or network transformer coupling, achieving USB signal isolation

Applications

Industrial Control
Audiovisual Multimedia
Computer Peripherals

CH378

USB 2.0 High-Speed File Management Control Chip

CH378 is a high-speed file management control chip used in microcontroller systems to quickly read and write files in commonly used U disks or SD cards. You don't need to understand the underlying operations of a USB flash drive, an SD card, or the FAT file system to easily read and write files in a USB flash drive or SD card.

Block Diagram

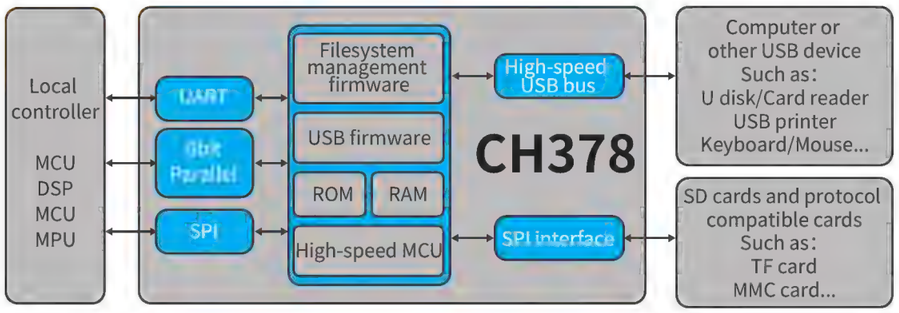

Features

- Support commonly used USB storage devices: U disk/USB hard disk/USB card reader, etc.
- Support commonly used SD cards and protocol-compatible cards: SD card/Mini-SD card/HC-SD card/MMC card/TF card
- Built-in USB2.0 protocol firmware, management firmware for FAT12/FAT16/FAT32 file system
- Built-in 20KB RAM requires few resources from external systems
- Through simple commands, the microcontroller can implement file operations (such as open/new/delete/search/enumeration, etc.).
- Support long file names and multi-level directory operations, support U disk and SD card
- Provide a variety of MCU interfaces: 8-bit passive parallel interface, asynchronous serial port, SPI interface
- Provide evaluation boards and common microcontroller application examples

Model Selection Guide

Part NO.	USB Interface Specifications	USB Interface Function	USB HUB	USB Underlying Firmware	File System Management Firmware	Operating USB flash drive	Operate SD Cards	MCU Interface			Connection Detection and Event Notification
								Parallel Port	Serial Port	SPI	
CH378	High /Full /Low	Host/Device	-	Built-In	√	√	√	√	√	√	√
CH376	Full /Low	Host/Device	-	Built-In	√	√	√	√	√	√	√
CH375	Full /Low	Host/Device	-	Built-In	-	√	-	√	√	-	√
CH374	Full /Low	Host/Device	3-Port Root Hub	-	-	√	-	√	-	√	√
CH372	Full /Low	Device Only	-	Built-In	-	√	-	√	-	-	√
CH370	Full /Low	Host Only	-	-	-	√	-	√	-	√	√

USB Universal Interface Chip

CH376: Microcontroller Reading and Writing U Disk or SD Card Files

- Built-in FAT12/FAT16/FAT32 file system management firmware, supports U disk or SD card
- Support long file names and the creation of multi-level subdirectories
- The SPI host interface supports SD cards, MMC cards, TF cards compatible with its protocols, etc.
- Provide a variety of MCU interfaces such as 8-bit passive parallel interface, asynchronous serial port, SPI interface, etc.
- Automatically detect the connection and disconnection of USB devices and provide event notifications.
- Support USB host and device modes and can be switched dynamically

CH375: Microcontroller Reads and Writes U Disk Files

- Support USB drives, flash drives, and card readers, among others
- The microcontroller reads and writes files from USB storage devices through the USB file system management library
- Automatically detect the connection and disconnection of USB devices, providing event notifications
- Support USB host and device modes with dynamic switching capability

CH374: Built-in HUB to Manage Multiple USB Devices Simultaneously

- Built-in 3-port USB root hub Root-HUB can connect and manage 3 USB devices at the same time
- Provide a variety of MCU interfaces such as 8-bit passive parallel port and SPI serial interface Automatically detect the connection and disconnection of USB devices and provide event
- notifications
- Supports USB host and device modes and can be switched dynamically

CH372: USB Device Interface to Automate the Enumeration Process

- Built-in USB underlying firmware, supporting convenient built-in firmware mode and flexible external firmware mode
- The built-in firmware can automatically complete the standard USB enumeration configuration process, simplifying firmware programming for microcontrollers
- Full-speed USB device interface, compatible with USB 2.0, plug-and-play

CH370: USB Host Interface, Operates Low/Full Speed USB Devices

- Provide 8-bit passive parallel port and SPI serial interface connection to MCU
- Automatically detect the connection and disconnection of USB devices, providing

CH377: USB2.0 High-Speed Card Reader Chip

- Support SD card, MMC card, and SPI interface FLASH chip
- Compatible with SD card specification 2.0, compatible with MMC specification 4.5
  Single 3.3V power supply; only crystal oscillator and capacitor are required for peripheral
- components
- Support serial port recorder mode to save serial port transparent transmission data in real-time

CH132: High-Speed USB Transceiver Chip with ULPI Interface

- Compatible with USB2.0 protocol specification and UTMI+Low Pin Interface (ULPI) 1.1 protocol specification
- Support USB 2.0 high-speed 480Mbps, full-speed 12Mbps, and low-speed 1.5Mbps data transmission and reception
- Can expand USB host or device interface for MCU or FPGA with ULPI interface

Applications

Industrial Controls	Internet of Things	Public Service Terminal	Intelligent Transportation
Security Monitoring	InstrumentationFinancial	Equipment	Electric Power Grid
Automotive Electronics	Textile Machinery	One Card System	

CH641
CH246

PD and Wireless Charging Dedicated MCU

CH641 is based on the QingKe RISC-V core, integrating PD PHY, BC interface, differential current sampling, and AC small signal amplification decoder. The chip has a 12V IO driver MOS, supporting USB PD and Type-C fast charging functions, BC1.2 and DCP, and other HV charging protocols. It can flexibly build differentiated and competitive wireless charging solutions and is suitable for simple motor applications.

Block Diagram

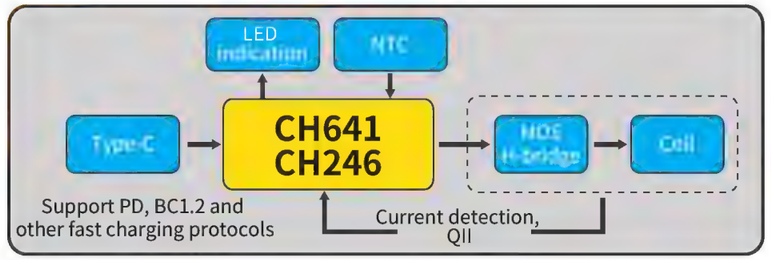

Features

- 32-bit QingKe RISC-V2A core, 48MHz main frequency
- 2KB SRAM, 16KB Flash
- USB PD and Type-C controllers and PHY
- 1 set of BC interfaces
- Differential input current sampling ISP/ISN
- AC Small Signal Amplification Decoder QII
- 15 external 10-bit ADC conversion channels
- 1 advanced-control timer, 1 general-purpose timer
- 25 I/O, 4 high-voltage drive pins, 5 low-voltage strong drive pins
- Support static and dynamic FOD foreign object detection
- OVP overvoltage protection and OTP overheating protection
- Support low-power mode: Sleep/Standby
- 1 set of multi-pin mapped USART serial ports
- 1 I2C slave interface
- 64-bit chip unique ID
- 1-wire SDI
- Packaging forms: QFN16, QFN20, QFN28

Others

CH246: Wireless charging management chip, a single chip integrating wireless transceiver module and small signal decoding circuit, plus some customer-defined software can easily realize various.Wireless charging solution. Supports PD, BC1.2, and other protocols for fast charging input and supports 5W/7.5W/10W/15W wireless charging output.

CH271/CH275: Wireless charging transmitter full bridge power chip, equipped with 4 power switches, current sampling module, and wireless charging feedback signal amplification module. Integrated overcurrent/over-temperature/over-voltage protection, an Undervoltage locking module, and a built-in LDO provide a 5V or 3.3V power supply for MCU and peripheral simplification. CH271 supports 5V.Voltage, CH275 supports a voltage of 20V.

Applications

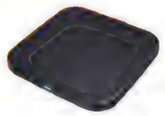
Wireless Charging Base

Wireless Charging Bracket

Car Wireless Charger

USB PD and other multi-fast charging protocol chips

CH235S is a Type-C single-port fast charging protocol chip packaged in ESSOP10, supporting Type-C fast charging protocols such as PD3.0/2.0, PPS, and Type-A fast charging protocols such as BC1.2. CH235S supports FB current regulation for various voltage references such as TL431 or DC-DC systems, supports cable compensation, integrates VBUS detection and discharge functions, and provides Undervoltage, overvoltage, overcurrent, and over-temperature protection functions.

CH230 CH231
CH233 CH235
CH236 CH237
CH238

Block Diagram

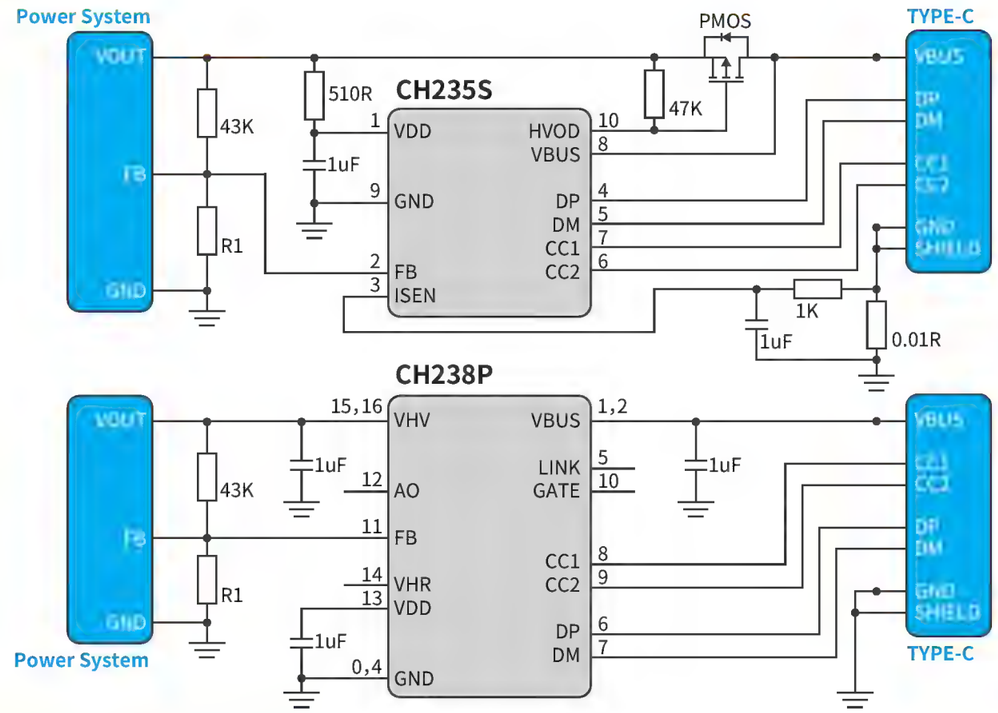

Model Selection Guide

Model	Interface Support	Protocol Support	Built-inMOS	Other Features	Feedback	Overcurrent/ Current Limiting	Package
CH230K/A	Single C	PD+PPS, up to13V	/	VBUSresidual power discharge	FB	/	SOT23-6
CH231K/A	Single C	PD+PPS, up to13V	/	/	FB	/	SOT23-6
CH233K/A	Single C	PD+PPS, up to21V	/	/	FB	/	SOT23-6
CH233P	Single C	PD+PPS, up to21V	/	Multi-chip combination, intelligent device recognition, and power allocation	FB	/	QFN16
CH235S	Single C	PD+PPS, commonly used A-port protocol, up to 13V	/	VBUS detection and discharge, A dual-core combination can reduce power or share 5V	FB	Overcurrent	ESSOP10
CH236D	Single C	PD+PPS, commonly used A port protocol, low voltage, and high current direct	/		AO	Current Limiting	QFN20
CH237D	A+C		/		AO	Current Limiting	QFN20
CH238P	Single C		Built-in NMOS		FB/AO	Current Limiting	QFN16

Others

CH226/5: USB Type-C to audio+fast charging solution, single chip embedded USB PD controller, realizing Type-C headphone interface for mobile phone charging

CH223
CH224
CH221

USB PD and other multi-fast charging protocol-powered chips

CH223 supports USB PD 3.0/2.0 fast charging protocol and can obtain PD-related data and modify voltage levels through the I2C interface. The chip has high integration and a streamlined peripheral, providing two controllable high-voltage open-drain output pins. The FB pin supports incremental open-loop current regulation mode and can be used for DC-DC or external voltage regulators. CH224 has no IIC interface and supports PD and BC protocols on a single chip. CH221 is a simplified version of CH224.

Block Diagram

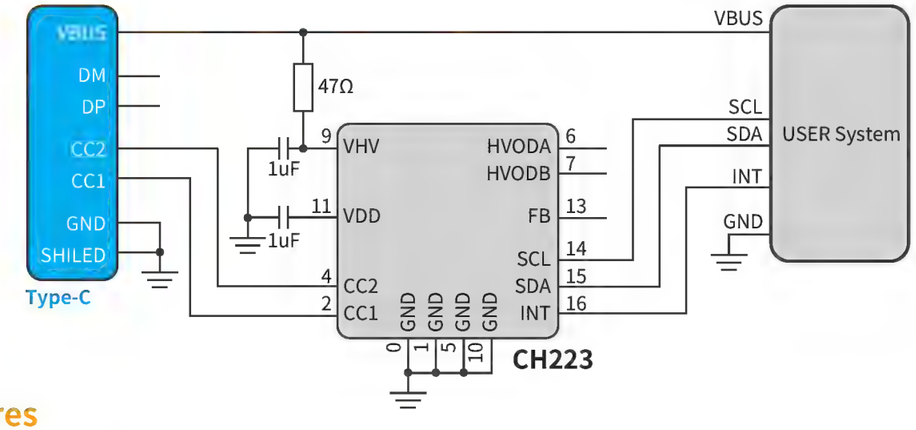

Features

- Support wide voltage input from 3V to 22V
- Support USB Type-C PD, forward and reverse insertion detection, and automatic switching.
- Support USB PD 3.0/2.0 fast charging protocol
- Two controllable high-voltage open-drain output pins that can be directly connected to PMOS to control VBUS power supply
- One 2-wire I2C slave interface, which can be used for PD-related data acquisition, voltage level modification, and HVOD state control
- Single-chip high integration, streamlined periphery, and low-cost
- Packaging form: QFN16

Others

CH224: A single chip supports USB PD, BC1.2, and other fast charging protocols, automatically detects VCONN and simulated eMarker chips, supports up to 100W power, has a built-in PD communication module, high integration, and streamlined peripherals. Integrated output voltage detection function and provides over-temperature and over-voltage protection.
CH220: USB PD fast charging protocol forwarding chip, which can forward the USB PD protocol between two Type-C interfaces. A single chip supports voltage and current limitation, power deduction, and overcurrent protection.

Applications

Wireless Charger Mobile Power Supply Small Household Appliances Battery Power Tools

CH252
CH253
CH254
CH251

eMarker Electronic Tag Chip

CH252 is a USB Type-C cable electronic tag chip that supports USB Type-C 2.1 standard and USB PD 3.1 standard. It supports up to USB4 protocol speed Passive Cable and Active Cable and integrates VCONN diodes, Ra resistors, and high-voltage LDO inside the chip. It can work on a single chip without the need for peripheral devices. Supports multiple configuration data updates and burning and has a locking function, facilitating development while ensuring data security.

Block Diagram

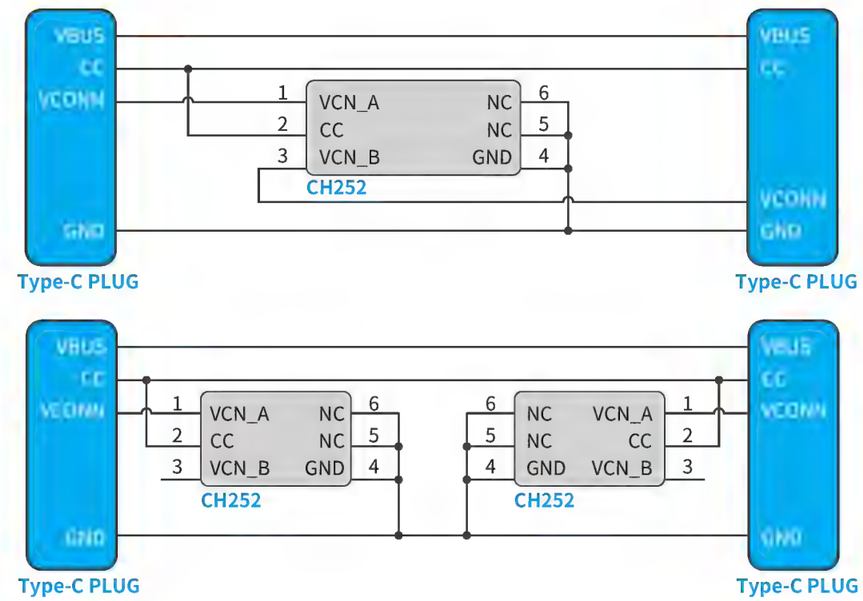

Features

- Support USB Type-C 2.1 standard and USB PD 3.1 standard
- Support Get_Manufacturer_Info command
- Support up to USB4 protocol rate Passive Cable and Active Cable
- High integration level, internally integrating VCONN diode, Ra resistor, and high-voltage LDO
- It can work on a single chip. No external components are required.
- Supports multiple data programming and has a locking function
- VCN_A and VCN_B operating voltage range: 2.9V~5.5V
- CC, VCN_A, and VCN_B pins have a high voltage resistance of 28V
- Package form: DFN6

Others

CH253: Full pin tolerant voltage of 53V, supports external NTC multi-level temperature protection and power control, and supports various Type-C cables with a power of 240W (48V5A).
CH254: Supports external NTC multi-level temperature protection and power control and supports various Type-C cables with a power of 240W (48V5A).
CH251: Simplified version, supports Type-C five-core cables with 100W (20V5A) or 240W (48V5A) power.

CH368

PCIe Bus Interface Chip

CH368 is a PCI-Express bus universal interface chip that converts PCIe into a 32-bit or 8-bit active parallel interface similar to ISA. It is used to make computer boards based on PCIe bus and upgrade boards originally based on ISA bus or PCI bus to PCIe. Suitable for high-speed real-time I/O control cards, communication interface cards, data acquisition cards, etc.

Block Diagram

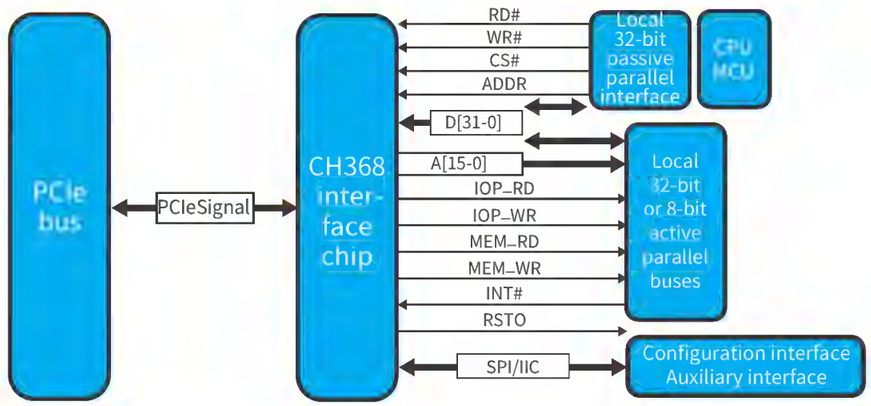

Features

- Support I/O port mapping, memory mapping, expansion ROM, and interrupts
- Provide 8-bit or 32-bit active parallel bus based on PCIe bus
- Provide a 32-bit passive parallel interface, which can be connected to other CPUs or microcontroller MCU buses and supports BusMaster/DMA
- Support I/O reading and writing, automatically assigns I/O base addresses, and supports I/O ports up to 232 bytes in length
- The width of the read and write pulses is selectable from 30ns to 450ns, and the 32-bit memory burst block access speed can reach 50MB per second.
- Support flash expansion ROM without hard disk booting and can provide subroutine library BRM for expansion ROM applications
- Provide high-speed 3-wire or 4-wire SPI serial host interface
- Provide a 2-wire serial host interface that can be connected to a serial EEPROM device similar to 24C0X for storing non-volatile data

Others

CH364: PCI extended ROM control chip, providing Flash-ROM for system security control cards/isolation cards, etc.
CH365: PCI universal interface chip, used for I/O control and other PCI devices (Slave), 8-bit parallel port, directly upgrading to ISA card.
CH366: PCI-Express extended ROM control chip, providing Flash-ROM for system security control cards/isolation cards, etc.
CH367: PCI-Express universal 8-bit interface chip used for PCIe communication cards/IO control cards, etc.

Applications

Industrial Control | Information Security | Medical Instruments | Instrumentation

CH384 CH382

PCIe bus four serial ports/dual serial ports and printing port chip

CH384 is a four serial and printing port chip for the PCI-Express bus, which includes four asynchronous serial ports compatible with 16C550/750 and an EPP/ECP enhanced bidirectional parallel port. It can be extended to up to 28 serial ports with a CH438 chip. It can be used for PCIe bus RS232 serial port expansion, PCIE high-speed serial port with automatic hardware rate control, serial port networking, RS485 communication, IrDA communication, parallel/print port expansion, etc.

Block Diagram

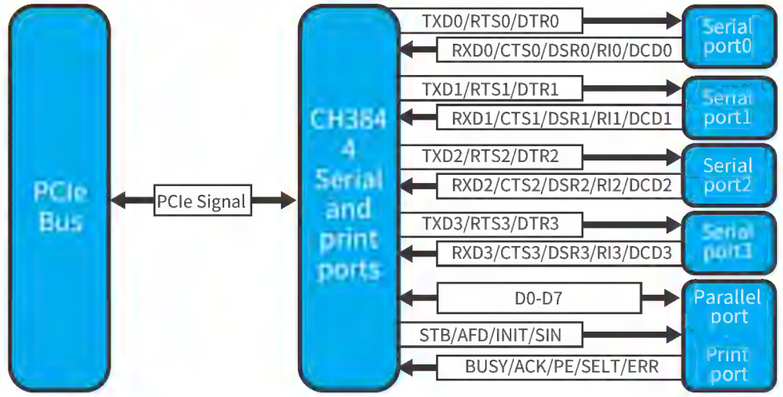

Features

- The same chip can be configured as a four-channel serial port with parallel/print ports on the PCIe bus or a four-channel serial port with extended multiple serial ports.
- Can connect serial EEPROM devices and set device identification (Vendor ID, Device ID, Class Code, etc.) for PCIe boards
- Fully independent 4 asynchronous serial ports, providing PCIe interface 8 serial ports, 16 serial ports, 28 serial ports, and other application solutions
- Serial programmable communication baud rate, supporting 115200bps and up to 8Mbps communication baud rate
- The serial port has a 256-byte FIFO first-in, first-out buffer supporting 4 FIFO trigger stages.
- Support full and half duplex serial communication, with built-in SIR infrared codec for serial port 0, and supports IrDA infrared communication.
- Support IEEE1284 parallel/print port working modes such as SPP, Nibble, Byte, PS/2, EPP, ECP, etc.
- The parallel port supports bidirectional data transmission, with a maximum transmission speed of 1M bytes per second.

Others

CH382: Can achieve PCI-E bus dual serial port and one parallel/print port expansion, 256 byte FIFO.

Applications

Industrial Control | Financial Equipment | One Card System
Medical Equipment | Office Automation

CH463
CH462

Application Block Diagram LCD driver chip

CH463 can be a display driver for 128-dot, 48-dot, etc. LCD panels. It also supports 35-key keyboard scanning and exchanges data with main control chips, such as microcontrollers, through a 2-wire serial interface.

Block Diagram

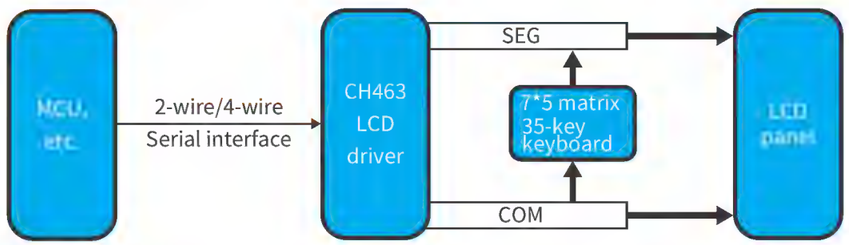

Features

- Support up to 16 * 8 LCD panels, 16 SEGs, and 8 COM
- Support LCD specifications such as 1/4 duty, 1/3 bias, or 1/8 duty, 1/4 bias
- Built-in bias circuit, providing VLCD pin for adjusting LCD working voltage
- Support buzzer drive output with 2 selectable frequencies
- Support frame frequency adjustment provides 64-level PWM and can be used for LCD backlight adjustment
- Built-in 35-key keyboard controller supports 7 * 5 matrix keyboard scanning and supports combination keys
- Built-in clock oscillation circuit, saving external clock or oscillation components, more anti-interference

Others

CH462: Support up to 32 * 4 LCD panels, supports 1/2 or 1/3 bias, 1/2 or 1/3 or 1/4 duty LCD display applications; Provide VLCD pins,Used to adjust the working voltage of LCD; Built-in bias circuit and clock oscillation circuit, providing two optional buzzer frequencies.

Applications

Weight/Scale	Industrial Sewing Machine	Handheld Devices
Instrumentation	Fitness Equipment	Medical Terminal

CH422
CH423

Digital Tube Display Driver and I/O Expansion Chip

CH422/CH423 can be used for remote I/O expansion, supporting input level change interrupt, driving digital and LED light-emitting tubes, adjusting brightness, and exchanging data with microcontrollers through a 2-wire serial interface.

Block Diagram

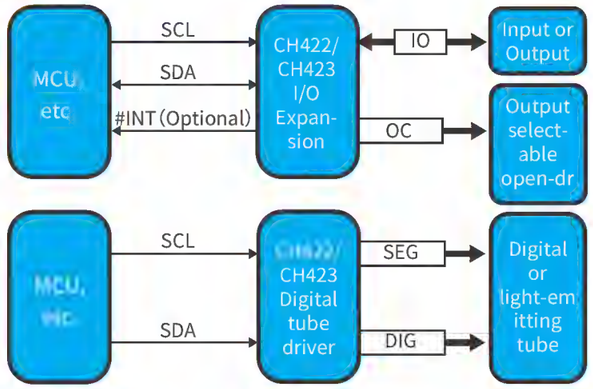

Features

- During I/O expansion,
  8 GPIOs and 4 or 16 GPOs can be remotely extended through a 2-wire serial interface,
  You can choose between push-pull output or open-drain output through the output pin GPO
- When driving the digital tube,
  Can dynamically drive 4 common cathode digital tubes (32 LED light-emitting tubes) to 16 common cathode digital tubes (128 LED light-emitting tubes),Or statically drive 3 common anode digital tubes (24 LED light-emitting tubes)
- Support brightness adjustment
- Built-in current drive stage, segment drive current not less than 15mA, output word current not less than 100mA/120mA
- High-speed 2-wire serial interface, compatible with I2C. Save pins
- Support 3V-5V power supply voltage, support low-power sleep and wake-up

Applications

Smart Home	Data Acquisition	Weighing Instrument
Motor Control	Audiovisual Multimedia	Instrumentation

CH457

128 LED display driver chips

Display IC new technology, supporting ordinary light beads, single panel cloth board

CH457 is a 128 LED display driver chip. CH457 has a built-in clock oscillation circuit that can dynamically drive 128 LED light-emitting tubes with a 32-bit 4-segment structure or 16-bit 8-segment structure; CH457 exchanges data with microcontrollers through a 2-wire or 3-wire serial interface.

Block Diagram

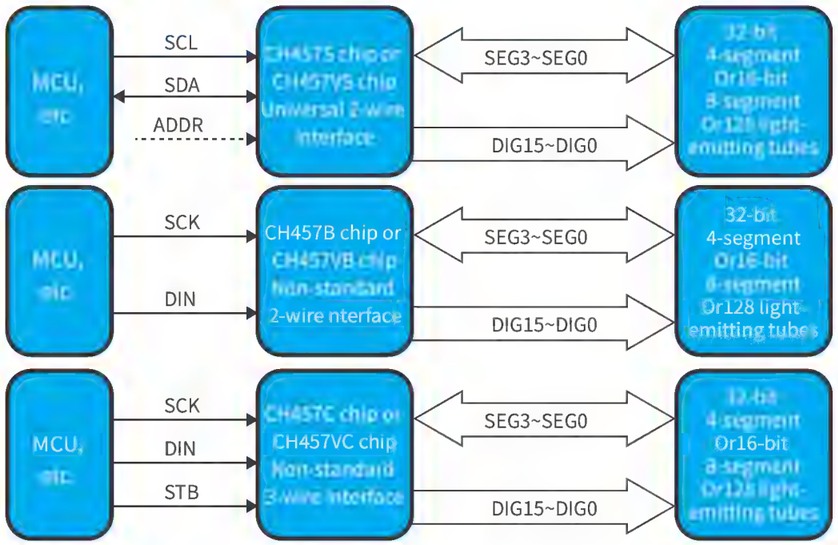

Features

- Built-in display current driver stage, segment current not less than 30mA, word current not less than 120mA
- Dynamic display scanning control, directly driving 128 light-emitting tube LEDs with 32-bit 4-segment s tructure or 16-bit 8-segment structure
- Internal current limiting, providing 8-level brightness control through duty cycle setting
- High-speed 2-wire or 3-wire serial interface, clock speed from 0 to 2MHz, universal 2-wire compatible with 2-wire I^2C-bus, saving pins
- Built-in clock oscillation circuit, no need for external clock or external oscillation components, more anti-interference
- Automatic low-power sleep, saving electricity
- 8KV Enhanced ESD Performance
- CH457S/B/C is used for 5V voltage and can support 3.3V; CH457VS/VB/VC is used for 3.3V voltage and can support 2.8V
- Support low-cost single-panel PCB wiring and full SMT process
- Packaging form: SOP28, lead-free packaging, compatible with RoHS

Applications

Instrumentation	Medical Equipment	One Card System
Scale	Industrial Equipment, Handheld Devices	

Display and Keyboard Scanning Control Selection

Model	Digital Tube	LED/ Segmented LCD	Keys	Interface	Features
CH457	–	128/—	–	3wire/ 2wire	Display IC's new technology, compatible with multiple previous generation products, supports ordinary LED beads and single-panel fabric boards.
CH450	6*8	48/—	48	2wire	Small packaging.
CH451	8*8	64/—	64	4wire	It supports multi-chip cascading, BCD decoding, movement, flickering, and more.
CH452	8*8	64/—	64	4wire/ 2wire	It supports multi-chip cascading, light beam, BCD decoding, movement, flashing, etc. Support 2 channels of GPO universal output.
CH453	16*8	128/—	64	2wire	High-cost performance, fully pin compatible with CH423.
CH454	8*16/7*17	128/—	64	2wire	Support segments 11, 14, 16 x 8, and 17 x 7. Support 8-way GPIO universal input/output.
CH455	4*8	32/—	28	2wire	Support key combinations.
CH456	16*8	128/—	64	2wire	Few pins, a high driving current, and a simple peripheral design.
CH422	4*8	32/—	–	2wire	Support IO expansion.
CH423	16*8	128/—	–	2wire	Support IO expansion.
CH462	–	—/32*4	–	4wire	Optional 1/2 or 1/3 bias, 1/2 or 1/3 or 1/4 duty LCD specifications.
CH463	–	—/16*8	35	2wire	Support 1/4 duty, 1/3 bias, or 1/8 duty, 1/4 Bias and other LCD specifications. Support combination keys.

CH438

Eight Serial Port Expansion Chip

CH438 includes 8 asynchronous serial ports compatible with 16C550 or 16C750, supporting a communication baud rate of up to 4Mbps. It can be used for RS232 serial port expansion in microcontrollers/embedded systems, high-speed serial ports with automatic hardware rate control, RS485 communication, and more.

Block Diagram

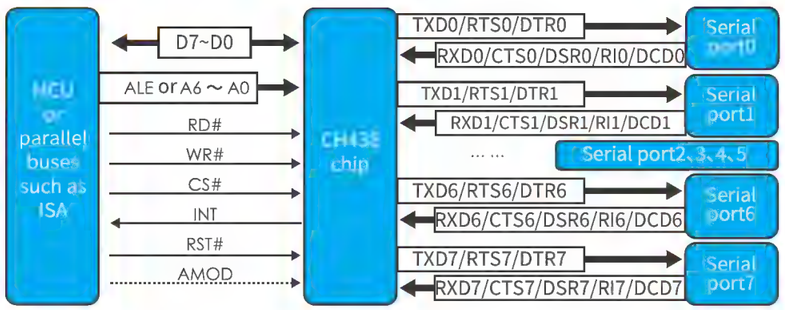

Features

- Fully independent eight asynchronous serial ports, compatible with 16C550, 16C552, 16C554, and 16C750 with enhanced features
- Programmable communication baud rate, supporting communication baud rates up to 4Mbps
- Built-in 128 bytes FIFO first in, first out buffer, supporting 4 FIFO trigger stages
- Support hardware flow control signal CTS and RTS automatic handshake and automatic transmission rate control, compatible with TL16C550C.
- Optional connection of interrupt output pins, effective at low levels, can be replaced by querying the interrupt flag bit in the register.
- Built-in clock oscillator supports crystals in the frequency range of 0.9216MHz to 32MHz and defaults to using 22.1184MHz crystals.
- Provide an 8-bit passive parallel interface with a speed of 10MB to connect to a microcontroller.
- Support 5V or 3.3V power supply voltage

Others

CH432: Dual serial port expansion chip, compatible with 16C550,
used for asynchronous serial port expansion through parallel or SPI interfaces.
CH9434: Four serial port expansion chips, compatible with 16C550,
used for asynchronous serial port expansion through the SPI interface.

Applications

Internet of Things	Computer Peripherals	Security Monitoring
Instrumentation	Electric Equipment	Industrial Equipment

CH481 CH483 CH484 CH486 CH482 CH9445

USB 3.0 Super Speed Analog Switch Chip

CH481 is a matrix exchange analog switch for 2-channel ultra-high-speed differential signals;
CH484 is an analog switch of one out of four for two ultra-high-speed differential signals;
CH9445 is a 4:6 cross-channel ultra high-speed differential signal analog switch
he Qinheng high-speed analog switch series chips can switch differential signals such as USB3.0 Super Speed, PCIe Gen1/2, SATA/SAS 1.5G/3G/6G, Display Port, and other non-differential and video signals.

Block Diagram

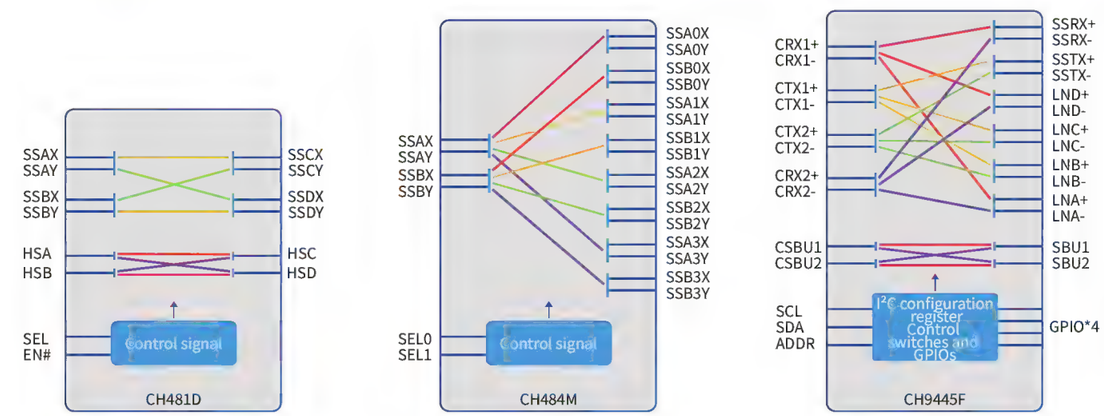

Features

- High bandwidth, SS overspeed channel supports 6Gbps differential signal
- HS high-speed channel supports 1.5G/2.5Gbps differential signal
- With low conductivity resistance, Ron's typical value is about 4 Ω
- Low crosstalk, high isolation
- The multi-channel switch supports global enablement
- Support video signal, ultra high speed/high-speed USB signal switching
- Support 3.3V power supply voltage, low static power consumption

Model Selection Guide

Part NO.	Function	Package
CH481D	2 differential channel switching, four poles double throw ultra high-speed analog switch	QFN20X25X45
CH484M	There are two differential channels, one out of four, four poles, and four throw ultra high-speed analog switches.	QFN42C-3.5*9
CH482D/X	Two differential channels, one out of two, four poles double throw ultra high-speed analog switch	QFN20X25X45
CH483M/X	Three differential channels, one out of two, six poles double throw ultra high-speed analog switch	QFN42-3.5*9
CH486F	Two differential channels, one out of four, four poles, four throw high-speed analog switch	QFN28

Note: 1. The bottom plate of the QFN package is marked as 0# pin, which is not necessary, but it is recommended to connect
2. CH483X is only used for compatible applications and requires a reservation. For new designs, please give priority to CH483M or CH482D

CH448/4
CH440/5
CH442/3

Low Resistance and High Bandwidth Analog Switch Chip

CH448 is a dual-channel 8-to-1 analog switch chip. The channels can be independently enabled. The bandwidth is up to 550MHz. It supports differential signals and can be used for 8-to-1 switching of video signals or high-speed USB signals. It can also be used for 16-to-1 selection. The control signal of CH448 can be independent of the power supply voltage and supports 5V, 3.3V, and 2.5V.
CH444 is a dual-channel 4-to-1 option, CH440/CH445 is a four-channel 2-to-1 option, CH442 is a dual-channel 2-to-1 option, and CH443 is a single-channel 2-to-1 option.

Block Diagram

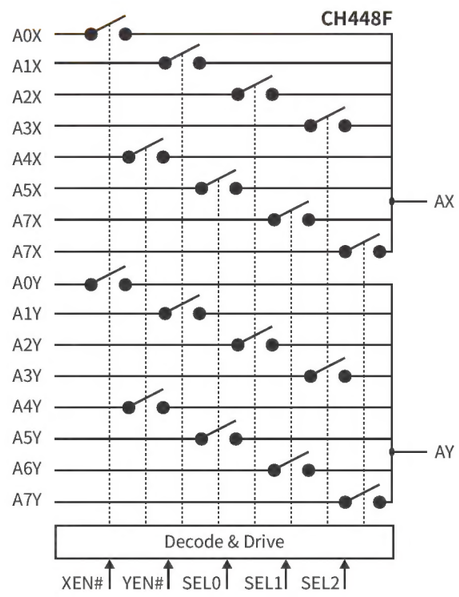

Model Selection Guide

Part NO.	Function	Package
CH448F	2-channel 8 pick 1	QFN24
CH444G	2-channel 4pick 1	SOP16
CH444P		QFN16
CH440G	4-channel 2 pick 1	SOP16
CH440P		QFN16
CH440R		TSSOP16
CH445P		QFN16
CH442E	2-channel 2 pick 1	MSOP10
CH443K	1-channel 2 pick 1	SOT363

Note:
1. Small size usually results in small parasitic L/C. For high-frequency signal applications, it is recommended to prioritize using it.Small package formats such as QFN or SOT.
2. The base plate of the QFN package is marked as 0# pin, which is a necessary connection for CH448F.

Features

- With low conductivity resistance, Ron's typical value is 5 Ω
- High bandwidth, Bw typical value is 550MHz
- Fast switching, Ton/Toff typical value less than 5ns
- Support video signal and high-speed USB signal switching
- The multi-channel switch supports global enablement
- Wide power supply voltage range, low static power consumption
- ESD supports 2KV HBM

Applications

Computer Peripherals Information Safety Audiovisual Multimedia

CH449
CH446

Dual 4x4 low resistance analog switch array chip

CH449 is a 4x4 matrix differential signal analog switch chip comprising 32 analog switches divided into two groups distributed at various intersections of two 4x4 signal channel matrices. Each analog switch can be independently turned on or off, achieving any dynamic connection of 4x4 differential signal channels.

Block Diagram

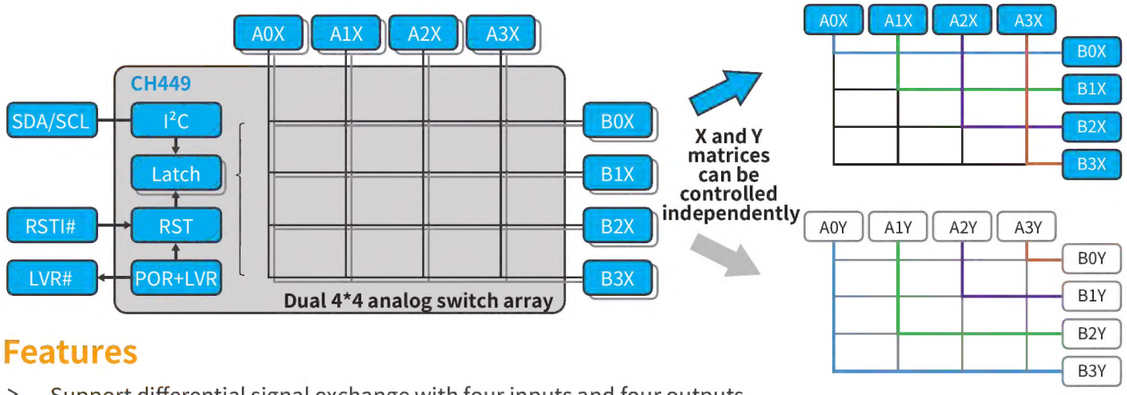

Features

- Support differential signal exchange with four inputs and four outputs
- Support two independent four-out single-ended signal exchanges
- With low conductivity resistance, Ron's typical value is 5 Ω
- High bandwidth, supports video signals, supports high-speed USB signals
- ESD supports 2KV HBM
- Compatible with a 2-wire serial control interface for I2C, with two sets of device addresses available for selection
- Built-in power-on reset and low voltage power reset, supporting external input reset
- All control signals are independent of the power supply voltage and support control signals of 5V, 3.3V, 2.5V, and 1.8V
- Wide power supply voltage range, low static power consumption, supporting rated 5V power supply voltage, available as low as 2.5V power supply

Model Selection Guide

Model	Functional Difference	Packaging Form	Size	Pin Spacing	
CH449F	Support rail-to-rail full amplitude analog signal	QFN24	4.0*4.0mm	0.50mm	19.7mil
CH449X	Higher bandwidth only supports analog signals below VDD-1.4V.				

Note: The bottom plate of the QFN package is marked as pin 0, which is an optional connection, but it is recommended to connect.

Others

CH446Q: 8x16 matrix analog switch chip, capable of arbitrary routing of 8x16 signal channels.

CH446X is a 5x24 matrix analog switch chip that automatically routes 5x24 signal channels.

Applications

Multi Group Video Signal Exchange Multiple USB Signal Exchange

Digital I/O Physical Layer Routing and I/O Expansion

Product/Solution

Low-Power Wireless

Product/Solution	Summary
Serial Bluetooth Mutual Transmission Module	Bidirectional data transmission, single chip solution, no programming required, and provides configuration tools. Modules are provided.
Bluetooth Ethernet Gateway	Quickly connect Bluetooth devices to the Internet. Provide chip-level solutions.
BLE Mesh Wireless Networking	A BLE Mesh development kit supports various Bluetooth Mesh Profile features, including forwarding, proxy, Friend node, and low-power consumption. Passed the official certification of Bluetooth SIG and the Alibaba-Tmall
BLE/UART/USB 3-Way Transparent Transmission	A single-chip solution is used to realize three-way interoperable transmission of Bluetooth, serial port, and USB interface data transmission. In addition to the main chip, it only requires one crystal and three capacitors, with streamlined peripherals and compact size.
Online Management Solution for Electronic Price Tags	Multiple interfaces for interoperability, providing various security measures such as access authentication, encrypted transmission, and timed verification devices. It is a single-chip solution with multiple low-power consumption modes.
High-Frequency Wireless Mouse	Single-chip receiver, based on self-developed 2.4GHz and high-speed USB technology, compact size, stable communication, and fast response; Paired with Bluetooth Low Energy chips such as CH592 and CH582, it can support a high frequency of 8k. It becomes more cost-effective using self-developed high-speed USB PHY and other professional interface IPs, as well as the QingKe RISC-V core.

Network Communication

Product/Solution	Summary
Serial Network Bidirectional Transmission Module	Bidirectional transparent transmission module through network serial ports to quickly connect serial devices to the Internet. Supports TCP/UDP working mode and supports serial/network configuration. Provide serial TTL/RS232/RS485 modules.
USB3.0 to Gigabit Ethernet	PHY through the RGMII interface to realize USB3.0 device to Ethernet (USB Gigabit network card) or USB3.0 host to Ethernet application, supporting optical fiber or Ethernet transmission. Provide chip-level solutions to support secondary development.
Ethernet Analyzer	Ethernet analyzer collects TCP/IP communication data through external hardware and uploads it for real-time display. It can filter settings and support operating systems such as Windows, assisting in developing and testing network products. Provide finished products.
Modbus Gateway Module	Supports 10/100M, full-duplex/half-duplex adaptive Ethernet interface, supports automatic conversion of MDI/MDIX lines, supports Modbus RTU and Modbus TCP data conversion, supports bidirectional transparent transmission of serial and network data, does not require user programming and development, and provides configuration tools.

USB Application

Product/Solution	Summary
KMFU Pair Cable	Keyboard and mouse sharing, file copying, USB peripheral sharing.The single-chip copy line solution adds bilateral USB HUB and peripheral sharing functions based on keyboard and mouse sharing, file copying, and clipboard sharing. Both sides of the HUB share multiple downlink ports, enabling flexible and convenient peripheral sharing without needing external analog switches. The signal quality is not compromised, and the product form factor is smaller. The solution supports Windows, macOS desktop systems, Android mobile devices, and cross-platform use.
USB2.0 High Speed Four-Port KVM Switch	This is for applications where multiple computers share a set of keyboards, mice, and monitors. A single chip integrates the main functional modules of USB2.0 high-speed KVM, and the peripherals are streamlined. 4 upstream ports support hot-swapping; 4 downstream ports support USB device mixing and transparent transmission functions. Supports mouse cross-screen, multiple hotkeys, key combinations, and parameters will not be lost when power is turned off.Provide 2/4-channel switching single-chip solutions, 8/16-channel, and other multi-chip solutions.
Keyboard and Mouse Recorder	The keyboard and mouse recorder achieves precise recording and playback functions of the keyboard and mouse, is a pure hardware solution, plugs, and plays, and supports hotkey control. Provide chip-level solutions.
USB Keyboard and Mouse Control	Using a USB keyboard and mouse communication control chip, the USB connection between the keyboard, mouse, and PC can be converted into a UART connection. Integration with other signals, extension of communication distance, keyboard and mouse data collection and control, etc. It is widely used in industrial control, security monitoring, digital KVM, remote computer management, and other fields. Provide single-chip solutions.
RGB Mechanical Keyboard	Provide RGB three-color full-color keyboard solution, with a single chip built-in RGB three-color LED dedicated driver unit, high integration; Provide a single chip monochrome single panel mechanical keyboard solution, single panel wiring, low cost; Chip level solution, supporting secondary development.
USB2.0 Optical Fiber/Network Cable Extender	For USB 2.0, long-distance signal extension or signal isolation. Using the USB 2.0 extender, the communication distance can reach over 6 kilometers, supporting high-speed/full-speed/low-speed USB transmission, HUB expansion, switch penetration, remote power on/off, and drive-free support for all systems. It can be widely used in computer peripherals, industrial control, medical equipment, security monitoring, and other fields. Provide dedicated chip solutions.
Type-C Dock Solution Supporting PD	Use a PD protocol chip, USB HUB chip, USB to Ethernet chip, and analog switch chip to realize three-in-one USB high-speed/super-high-speed data transmission, video display, and PD charging functions. Supports USB HUB expansion and HUB downstream USB peripheral function expansion, such as wired network cards, sound cards, card readers, etc.; supports Type-C interface function expansion of mobile phones, computers, and game consoles; endorses the expansion of Type-C interface PD fast charging function.
USB HUB	4-port/7-port USB2.0 high-speed HUB controller chip, 4-port USB3.2 Gen1 ultra-high-speed HUB controller chip, industrial-grade design, supports low-cost STT mode and high-performance MTT mode, low-power consumption, supports LPM Power management supports self-power supply or bus power supply mode, and supports independent current detection and power control for each port.
USB Network Card Solution	USB network card chip integrated USB2.0 PHY, supports full speed and high speed, integrates 10/100M Ethernet controller and PHY based on IEEE802.3, and has the advantages of high integration and low power consumption.

Data Collection

Product/Solution	Summary
Print Data Sensorless Collection Module	Sensorless collection plus network collection and cloud management.Offline printing data is collected non-inductively and collected in real-time in the cloud. The cloud performs operations such as image restoration, OCR recognition, keyword modeling, and extraction, and it outputs detailed content for each order in multiple formats. Supports custom development of additional printing of bills and detailed statistical output functions, supports private cloud deployment, provides a stable and reliable big data foundation and platform interface for follow-up processes such as consumer trend prediction, personalized marketing planning, membership system development, etc., and achieves full-dimensional consumption information acquisition, multi-granularity data value transformation.
BLE Bluetooth Analyzer	Wireless communication data monitoring for low-power Bluetooth: Using the BLE analyzer, communication between broadcast channel packets or connecting devices for the BLE5.0 and BLE4 can be achieved. x protocols, and parse the protocol data through PC software, displaying it concisely and clearly, supporting settings such as statistics and filtering. It can be used for developing, designing, testing, etc. of BLE products.
Scanner/Keyboard Communication Data Acquisition Module	Application for collecting communication data from scanners or keyboards: Use the scanner/keyboard communication data acquisition module to obtain the data of the scanner and keyboard in real time and transmit it to the server for analysis and processing. It can be applied to supermarkets, retail, big data integration, and other fields.Provides modules and customization.
USB Bus Analyzer	For USB bus data monitoring: Use a USB bus analyzer to physically capture USB bus signals, analyze standard protocols, and upload and display them in real-time.It can be used for learning, developing, testing, etc., and USB products.Available in both USB2.0 and USB1.1 finished products.

Data Storage and Security

Product/Solution	Summary
Media Encryption Secure Disk	Data security applications for storage media: Through integrated USB 3.0/SATA/SDIO and other ultra-high/high-speed interfaces and hardware data stream encryption modules, functions such as data encryption management of various storage media are realized.Provide MCU single-chip solution.
USB 2.0/3.0 Unidirectional Transmission	File security import application for classified computers: By using dedicated chips and customizable software tools, the function of unidirectional import of files from USB mobile storage media to the confidential host system can be achieved.Provide chip-level solutions.
Hard Disk and Network Security Isolation Card	For applications that prevent important data in hard drives from being leaked through networks or other means at the physical layer: Using a hard disk and network security isolation card scheme, divide the computer into a secure environment (internal network) and an open environment (external network),It also uses independent hard drives and networks, provides dedicated chips and matching software libraries, and supports custom interfaces. Provide PCIe/PCI/USB interface solutions and single/dual hard drive solutions.
SATA Electronic Disk	SATA hard disk applications for SD storage: Single chip solution, realizing SATA electronic disk composed of multiple SD card arrays.Provide modules.
Custom U disk	For dedicated USB storage applications: A single-chip solution supports customization of the USB drive manufacturer's name, capacity, serial number, and other information, and it expands the USB drive capacity by adding storage chips.Provide chip-level solutions.

Power Supply Protocol

Product/Solution	Summary
USB PD and other Multi-Protocol Power Receiving	Support all voltage regulation protocols defined in PD2.0~3.2 protocols, specifically 3.3-48V Fixed, PPS, EPR, and AVS protocols; Supports IO levels, UART, SPI, and I^2C and other conventional communication and control methods, and supports customization.
eMarker Electronic Label	For Type-C cable-related applications, it can work on a single chip without peripheral devices. The solution supports the USB Type-C 2.1 standard and USB PD 3.1 standard, with internal integration of VCONN diodes, Ra resistors, VBUS power supply units, and high-voltage LDO. It supports updating and burning configuration data through the Type-C interface and provides multiple factory default configurations. Optional temperature protection function, supporting 240W (48V5A) power and USB4Gen4 (80Gbps) Type-C cable.
Wireless Charging	A single-chip integrated wireless charging transceiver module and small signal decoding circuit support multiple charging for one chip, making implementing various wireless charging solutions such as Qi easy. The chip supports multiple USB PD and BC1.2 protocols for fast charging input, 5W, 7.5W, 10W, and 15W for wireless charging output. The chip integrates FSK/ASK decoding, FOD foreign object detection, and overvoltage/overcurrent/overheating protection functions, with high integration and few external devices. It can be widely used in the design of various wireless charging bases and brackets.

Interface Conversion

Product/Solution	Summary
USB3.0 FIFO	For USB 3.0 digital video transfer applications. Connect to the camera Sensor through DVP, or connect to the main processor such as FPGA through HSPI (3.8Gbps), and expand the USB3.0 interface to connect to the computer host or Gigabit Ethernet interface for data remote transmission server. Provide chip-level solutions and support secondary development.
USB Android AOA Transfer Plan	Used to connect Android phones or tablets to external GPIO, UART, PWM, I^2C, SPI master, and SPI slave protocol devices through USB, charging and communicating data simultaneously.Provide chip-level solutions.
USB to Multiple Serial Port	For USB expansion multi-serial port applications. Provide special chip to realize USB to 1/2/4/8-way TTL/RS232/RS422/ RS485 serial port supports Windows/Linux/Android/macOS and other operating systems. It can be based on the chip driver type, number of serial ports, supported serial port baud rate, serial port IO voltage working range, and provided 485 control signals.MODEM signal/GPIO quantity, etc., are selected. Provide chip-level solutions and modules.
PCIe to Multiple Serial/Parallel Port	PCIe extends the application of multiple serials and parallel/print ports. Through the PCI-Express to 1/2/4/8/28 serial and parallel/print port chip solution, TTL, RS485, RS232 serial port expansion, and other purposes can support up to 8Mbps baud rate.
PCI to Multiple Serial/Parallel Port	Expand multiple serial and parallel port applications for PCI. Through PCI to 1/2/4/8/16/24 serial port and parallel port/printing port chip solutions, RS232 serial port expansion of PCI bus, serial port networking, RS485 communication, and other purposes are realized.Provide chip-level solutions.

Contact Us

Sales Support

Sales Email

sales@wch.cn

Technical Support

Technical Email

tech@wch.cn

WCH official website

https://wch-ic.com